US009459060B2

(12) **United States Patent**
Langevin et al.

(10) **Patent No.: US 9,459,060 B2**
(45) **Date of Patent: Oct. 4, 2016**

(54) **MODULAR FIREARM**

(75) Inventors: **Kevin Langevin**, Berlin, CT (US); **Kevin Audibert**, Wolcott, CT (US)

(73) Assignee: **COLT'S MANUFACTURING IP HOLDING COMPANY LLC**, West Hartford, CT (US)

(*) Notice: Subject to any disclaimer, the term of this patent is extended or adjusted under 35 U.S.C. 154(b) by 389 days.

(21) Appl. No.: **13/444,160**

(22) Filed: **Apr. 11, 2012**

(65) **Prior Publication Data**

US 2012/0297656 A1 Nov. 29, 2012

Related U.S. Application Data

(63) Continuation-in-part of application No. 12/898,610, filed on Oct. 5, 2010.

(60) Provisional application No. 61/248,786, filed on Oct. 5, 2009, provisional application No. 61/475,149, filed on Apr. 13, 2011.

(51) **Int. Cl.**

F41A 3/66	(2006.01)
F41A 11/02	(2006.01)
F41A 3/84	(2006.01)

(52) **U.S. Cl.**

CPC .. ***F41A 3/66*** (2013.01); ***F41A 3/84*** (2013.01); ***F41A 11/02*** (2013.01); *Y10T 29/49817* (2015.01)

(58) **Field of Classification Search**

CPC F41A 11/00; F41A 11/02; F41A 5/00; F41A 21/00; F41A 9/37; F41A 3/84; F41C 23/14; F41C 3/00; F41B 11/00

USPC 42/16

See application file for complete search history.

(56) **References Cited**

U.S. PATENT DOCUMENTS

2,447,091	A		8/1948	Pope
3,026,777	A	*	3/1962	Wooderson, III 89/149
3,183,616	A		5/1965	Gandy
3,198,076	A		8/1965	Stoner

(Continued)

FOREIGN PATENT DOCUMENTS

CA	2687510	3/2010
WO	8403937	10/1984

(Continued)

OTHER PUBLICATIONS

Brownells, Catalog #6 AR-15/M16 & AR-Type. 308 Catalog—2010-2011 (Examiner's Office).

(Continued)

Primary Examiner — Stephen M Johnson
Assistant Examiner — Benjamin Gomberg
(74) *Attorney, Agent, or Firm* — Cantor Colburn LLP

(57) **ABSTRACT**

A firearm having a lower receiver is provided. The receiver is adapted to couple with a plurality of upper receivers having different calibers. The lower receiver comprises a receiver extension having an opening therein. A spring is disposed within the opening. A buffer member is provided having a first portion having an end. The buffer member is coupled to the spring within the opening, wherein the buffer member is movable between a first position where the end is within the opening and a second position wherein the end external to the opening.

16 Claims, 40 Drawing Sheets

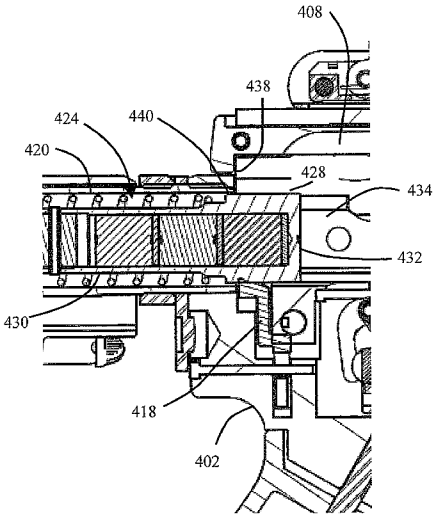

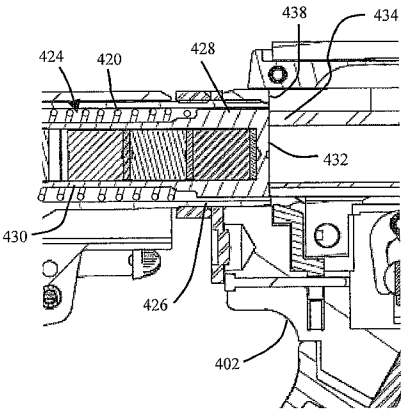

(56) **References Cited**

U.S. PATENT DOCUMENTS

3,618,457	A	11/1971	Miller	
3,771,415	A	11/1973	Into et al.	
4,057,003	A	11/1977	Atchisson	
4,253,377	A	3/1981	Arnett	
4,288,938	A	9/1981	Kahn	
4,297,800	A	11/1981	Atchisson	
4,297,801	A	11/1981	Kahn	
4,433,610	A	2/1984	Tatro	
4,448,109	A	5/1984	Johnson	
4,531,446	A	7/1985	VanVoorhees	
4,536,982	A	8/1985	Bredbury et al.	
4,644,930	A	2/1987	Mainhardt	
4,648,192	A	3/1987	Harness et al.	
4,658,702	A	4/1987	Tatro	
4,663,875	A	5/1987	Tatro	
4,920,678	A	5/1990	Brown	
4,937,964	A	7/1990	Crandall	
5,046,275	A	9/1991	Brown	
5,115,588	A	5/1992	Bronsart et al.	
5,187,312	A	2/1993	Osborne	
5,228,887	A	7/1993	Mayer	
5,343,650	A	9/1994	Swan	
5,487,233	A	1/1996	Jewell	
5,501,134	A	3/1996	Milazzo et al.	
5,623,114	A	4/1997	Soper	
5,726,377	A	3/1998	Harris et al.	
5,760,328	A	6/1998	Robbins	
5,824,943	A	10/1998	Guhring et al.	
5,832,911	A	11/1998	Mayville et al.	
5,881,485	A	3/1999	Milazzo	
5,900,577	A	5/1999	Robinson et al.	
5,924,231	A	7/1999	Kidd	
6,070,352	A	6/2000	Daigle	
6,131,324	A	10/2000	Jewell	
6,212,814	B1	4/2001	Lambie	
6,250,194	B1	6/2001	Brandl et al.	
6,293,040	B1	9/2001	Luth	
6,393,751	B1	5/2002	Liebenberg	
6,493,979	B2	12/2002	Katzmaier	
6,536,152	B1	3/2003	Wisz	
6,606,812	B1	8/2003	Gwinn, Jr.	
6,772,072	B2	8/2004	Ganguli et al.	
6,772,548	B1	8/2004	Power	
6,931,775	B2	8/2005	Burnett	
7,059,076	B2	6/2006	Stoner et al.	
7,131,228	B2	11/2006	Hochstrate et al.	
7,162,824	B1	1/2007	McCormick	
7,293,385	B2	11/2007	McCormick	
7,302,881	B1	12/2007	Tertin	
7,331,136	B2	2/2008	Geissele	
7,363,741	B2	4/2008	DeSomma et al.	
7,421,937	B1	9/2008	Gangl	
7,444,775	B1 *	11/2008	Schuetz	42/76.01
7,574,823	B2	8/2009	Nakayama	
7,584,567	B1	9/2009	DeSomma et al.	
7,596,900	B2	10/2009	Robinson et al.	
7,600,338	B2	10/2009	Geissele	
7,610,844	B2	11/2009	Kuczynko et al.	
7,631,453	B2	12/2009	Longueira	
7,654,187	B2	2/2010	Hochstrate et al.	
7,712,241	B2	5/2010	Teetzel et al.	
7,716,865	B2	5/2010	Daniel et al.	
7,775,150	B2	8/2010	Hochstrate et al.	
7,810,271	B2	10/2010	Patel	
7,934,447	B2	5/2011	Kuczynko et al.	
7,938,055	B2	5/2011	Hochstrate et al.	
7,966,761	B1	6/2011	Kuczynko et al.	
7,971,379	B2	7/2011	Robinson et al.	
7,971,382	B2	7/2011	Robinson et al.	
8,015,908	B2	9/2011	Kline et al.	
8,028,459	B2	10/2011	Williams	
8,028,460	B2	10/2011	Williams	
D649,093	S	11/2011	Yokoi et al.	
D649,498	S	11/2011	Sowa et al.	
8,051,595	B2	11/2011	Hochstrate et al.	
8,074,556	B2	12/2011	Bantle et al.	
D651,948	S	1/2012	Fukui et al.	
8,087,194	B1	1/2012	Vuksanovich	
8,141,287	B2	3/2012	Dubois	
8,234,808	B2	8/2012	Lewis et al.	
8,234,809	B2	8/2012	Daniel	
8,245,626	B2	8/2012	Langevin	
8,336,243	B2	12/2012	Langevin et al.	
8,453,364	B2	6/2013	Kucynko et al.	
2003/0101631	A1	6/2003	Fitzpatrick et al.	
2005/0188827	A1	9/2005	McNulty	
2005/0241470	A1	11/2005	Hochstrate et al.	
2005/0262752	A1	12/2005	Robinson et al.	
2005/0265513	A1	12/2005	Dahlback et al.	
2006/0010748	A1	1/2006	Stoner et al.	
2006/0026883	A1	2/2006	Hochstrate et al.	
2006/0065112	A1	3/2006	Kuczynko et al.	
2006/0156606	A1 *	7/2006	Robinson et al.	42/7
2006/0236582	A1	10/2006	Lewis et al.	
2006/0254414	A1	11/2006	Kuczynko et al.	
2007/0033851	A1	2/2007	Hochstrate et al.	
2007/0051236	A1	3/2007	Groves et al.	
2007/0199435	A1	8/2007	Hochstrate et al.	
2008/0301994	A1	12/2008	Langevin et al.	
2009/0000173	A1	1/2009	Robinson et al.	
2009/0007477	A1	1/2009	Robinson et al.	
2009/0031605	A1	2/2009	Robinson	
2009/0031606	A1	2/2009	Robinson et al.	
2009/0031607	A1	2/2009	Robinson et al.	
2009/0126249	A1	5/2009	Crommett	
2009/0178325	A1	7/2009	Veilleux	
2009/0183414	A1	7/2009	Geissele	
2009/0188145	A1	7/2009	Fluhr et al.	
2009/0277067	A1	11/2009	Gregg	
2010/0000138	A1	1/2010	Brown	
2010/0088523	A1	4/2010	Wooten	
2010/0095833	A1	4/2010	Gavage et al.	
2010/0126054	A1	5/2010	Daniel et al.	
2010/0229445	A1	9/2010	Patel	
2010/0282064	A1	11/2010	Bantle et al.	
2010/0300277	A1	12/2010	Hochstrate et al.	
2011/0056107	A1	3/2011	Underwood	
2011/0061281	A1	3/2011	Kapusta et al.	
2011/0119981	A1	5/2011	Larue	
2011/0131857	A1	6/2011	Kuczynko et al.	
2011/0173862	A1	7/2011	Williams	
2011/0265640	A1	11/2011	Kuczynko et al.	
2011/0283585	A1	11/2011	Cabahug et al.	
2012/0132068	A1	5/2012	Kucynko et al.	
2012/0151813	A1	6/2012	Brown	
2012/0152104	A1	6/2012	Audibert et al.	
2012/0152106	A1	6/2012	Langevin	
2012/0167433	A1	7/2012	Robbins et al.	

FOREIGN PATENT DOCUMENTS

WO	0114818	3/2001
WO	02068894 A1	9/2002
WO	2006137874	12/2006

OTHER PUBLICATIONS

Quad-Rail Handguard (2 pages) http://web.archive.org/web/20010908173536/http://www.cmore.com (dated Jul. 24, 2008).

Brownells, Catalog #6 1911 Catalog—2009-2012 (Examiners Office) p. 3. Fourth from the top (Tactical Carbine) Flat top receiver with cooling slots angled towards the buttstock end of firearm.

International Search Report dated Nov. 29, 2010 for International Application No. PCT/US2010/051533.

Written Opinion dated Nov. 29, 2010 for International Application No. PCT/US2010/051533.

International Preliminary Report on Patentability mailed Apr. 19, 2012 for International Application No. PCT/US2010/051533, International filing date Oct. 5, 2010; Report Issued Apr. 11, 2012.

Written Opinion of the International Searching Authority mailed Jan. 30, 2013 for International Application No. PCT/US2012/033220 filed Apr. 12, 2012. All art referenced is cited herein.

(56) **References Cited**

OTHER PUBLICATIONS

International Search Report mailed Jan. 30, 2013 for International Application No. PCT/US2012/033220 filed Apr. 12, 2012. All art referenced is cited herein.

Supplementary European Search Report mailed Jul. 29, 2014 for International Application No. PCT/US2012/033220.

Jeff W. Zimba, The hydra Modular Weapons System from MGI, The Small Arms Review, vol. 10 No. 8, May 2007.

David Crane, Bushmaster .338 Lapua Magnum MCR (Multi Caliber Rifle): Semi-Auto .338 Lapua Magnum AR Anti-Material/Sniper Rifle for Long-Range Interdiction. Will it live?.

Ceska Zbrojovka, Military 2010 Catalogue.

David Crane, New Cobb MCR (Multi-Caliber Rifle) Weapon System is Mil/Le/Civilian Ready, http://www.defensereview.com/new-cobb-mcr-multi-caliber-rifle-weapon-system-is-millecivillian-ready.

XCLR Robinson Firearms Spec Sheet, www.robarm.com/resources/products/xcrlstd/index.aspx.

* cited by examiner

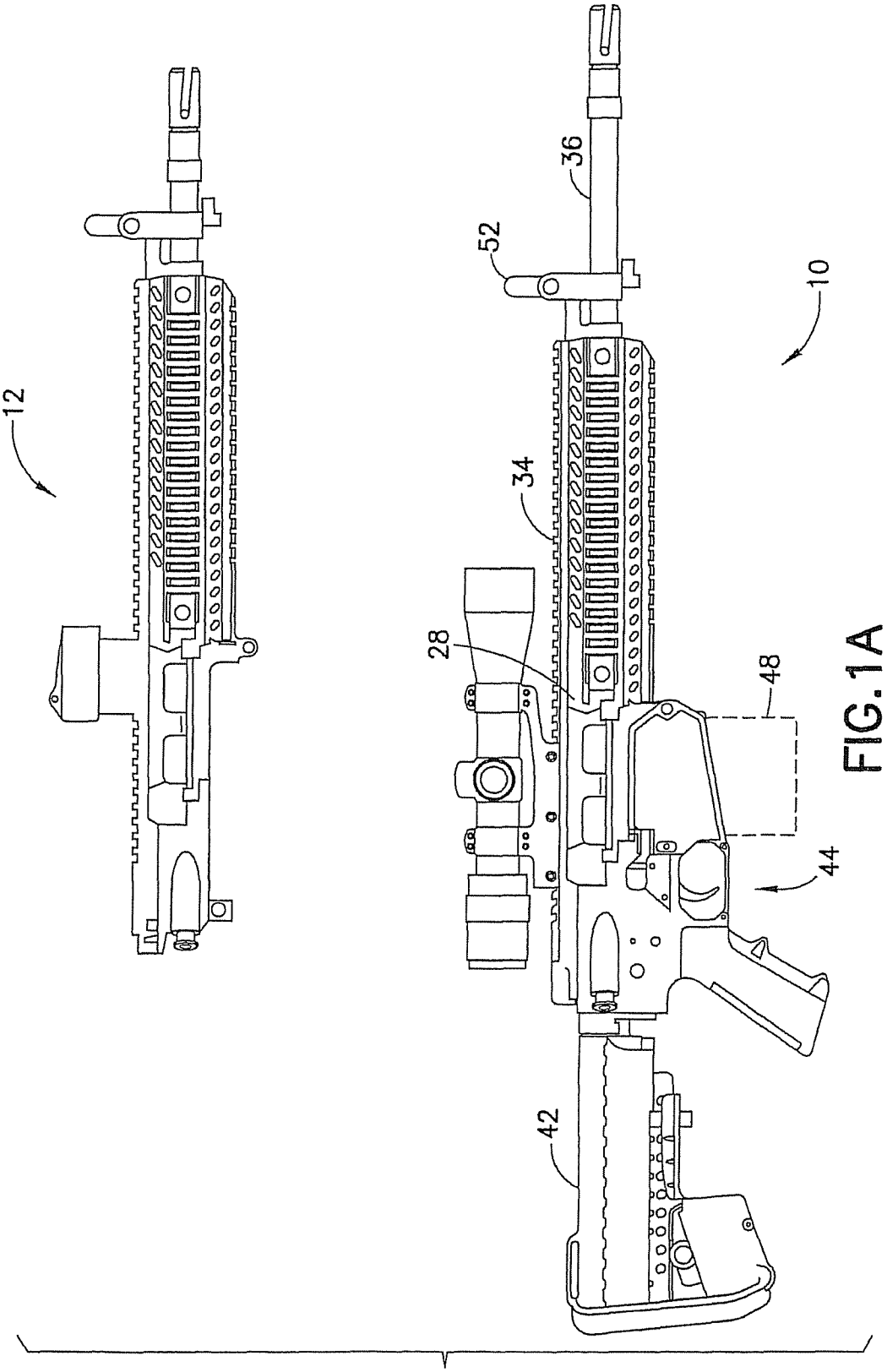

FIG. 1A

FIG. 1B

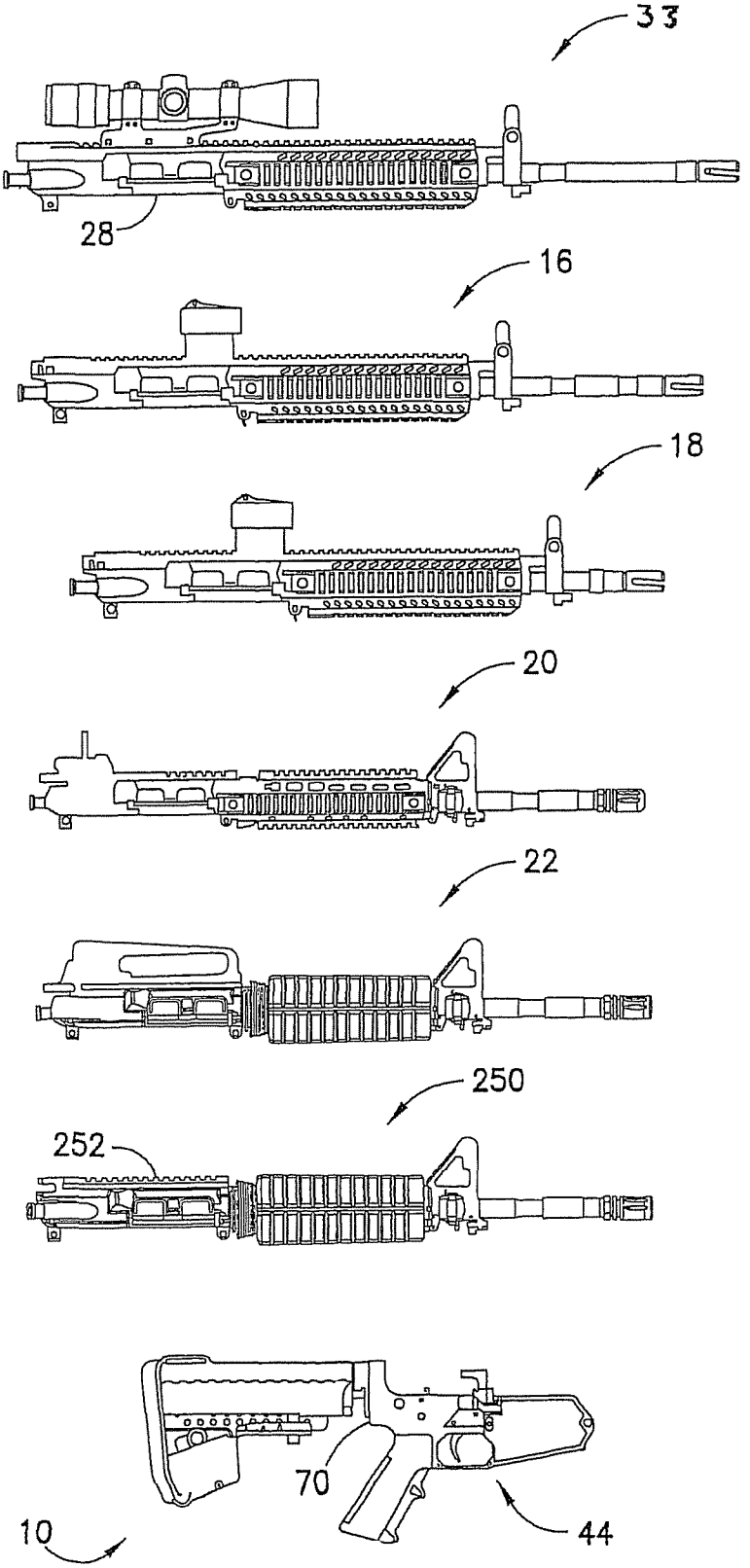

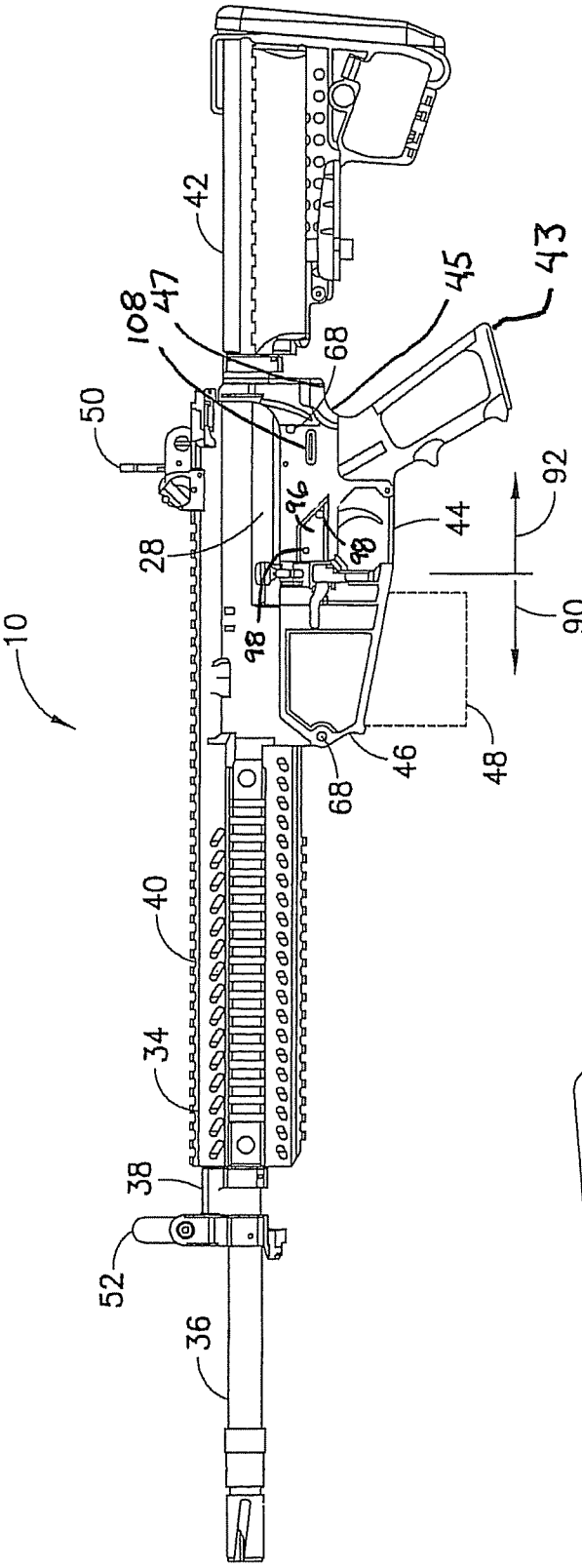
10
28
34
36
38
40
42
43
44
45
46
47
48
50
52
68
68
90
92
96
98
98
108

FIG. 1D

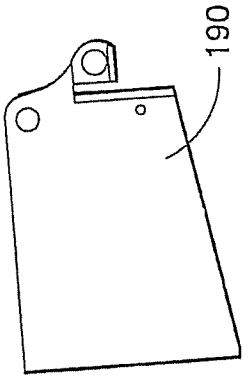
190

FIG. 1C

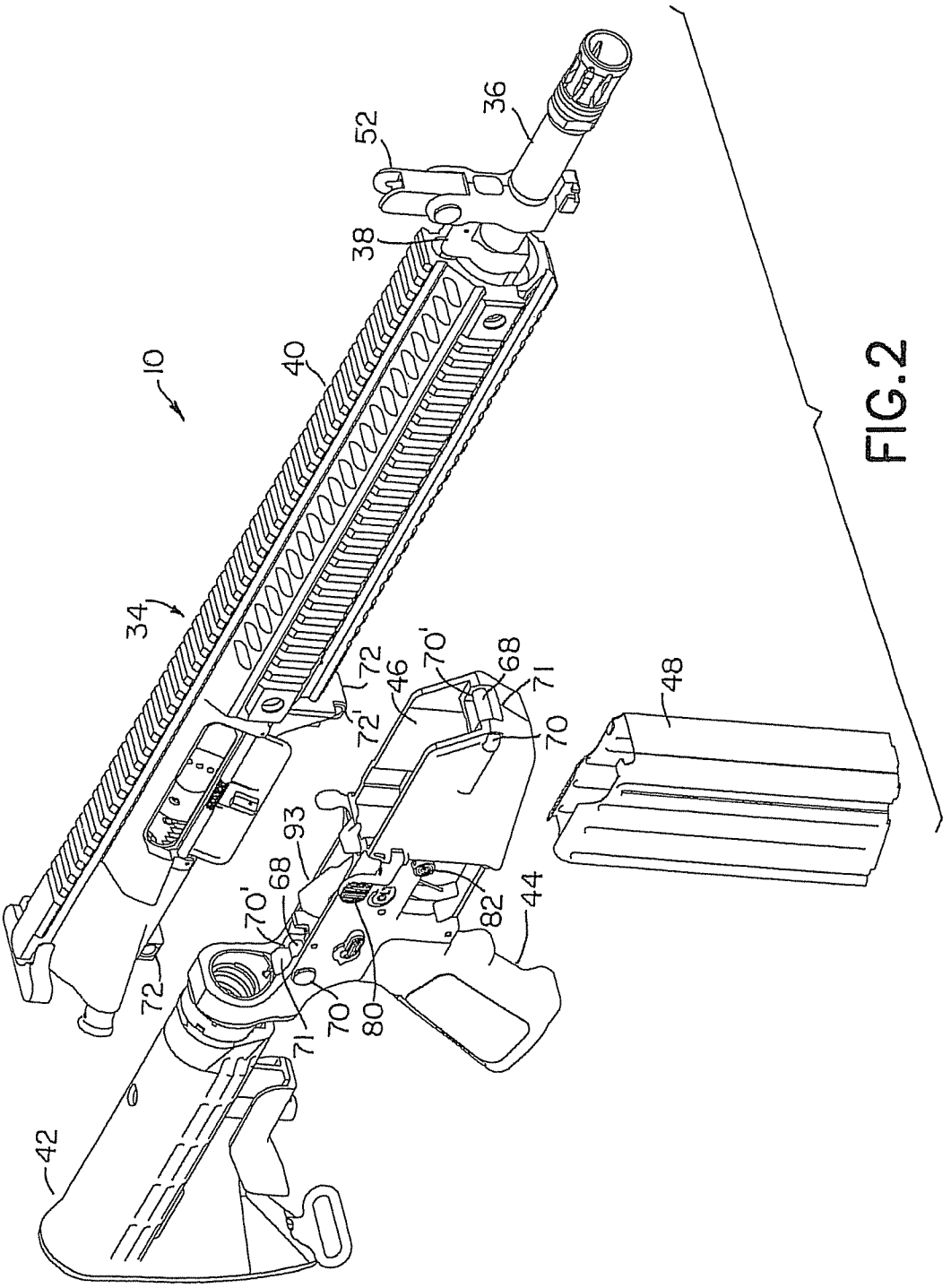

FIG.2

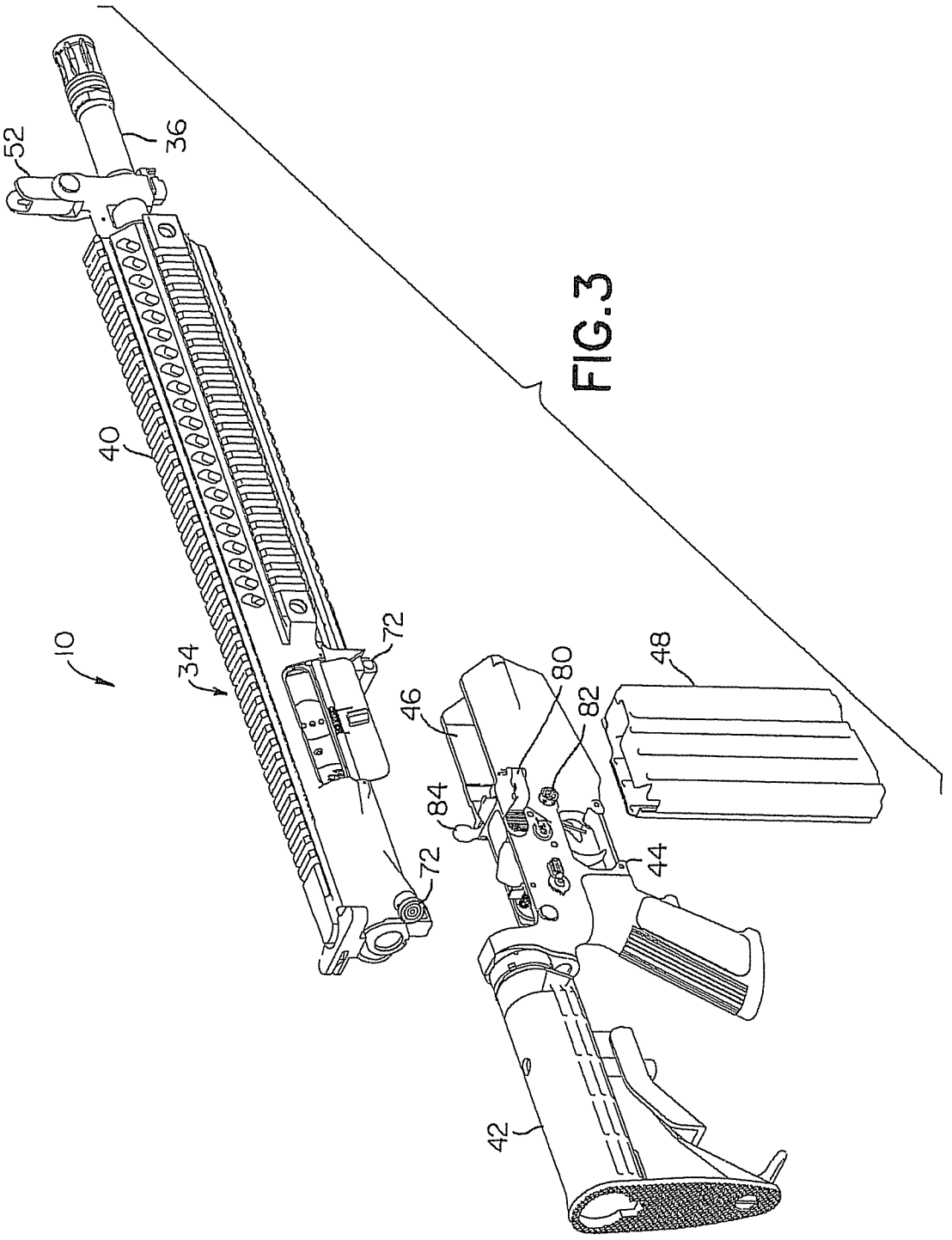

FIG.3

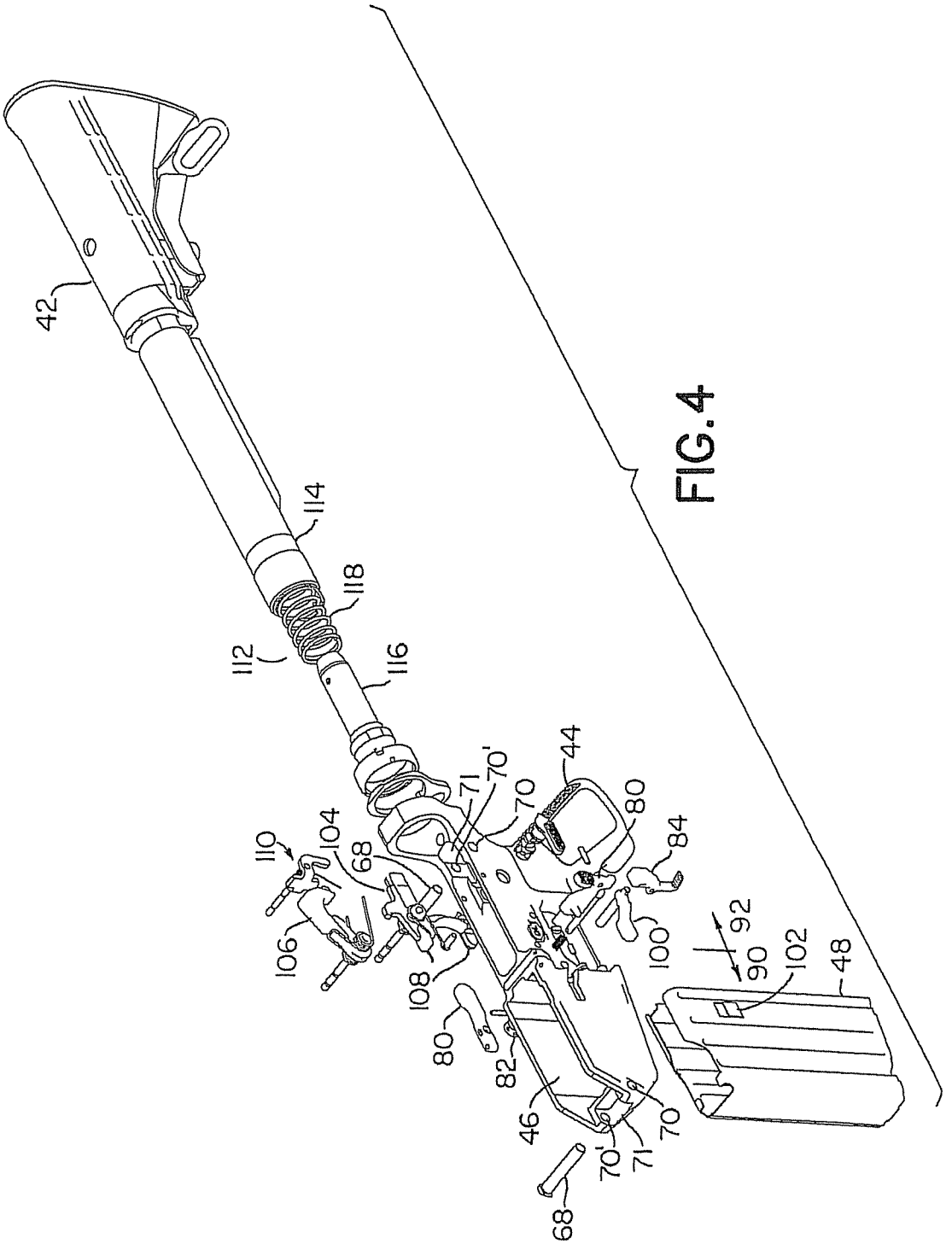
42
114
118
112
116
44
70'
71
70
80
84
110
104
68
106
108
80
82
46
70'
71
70
68
92
90
102
48
100

FIG. 4

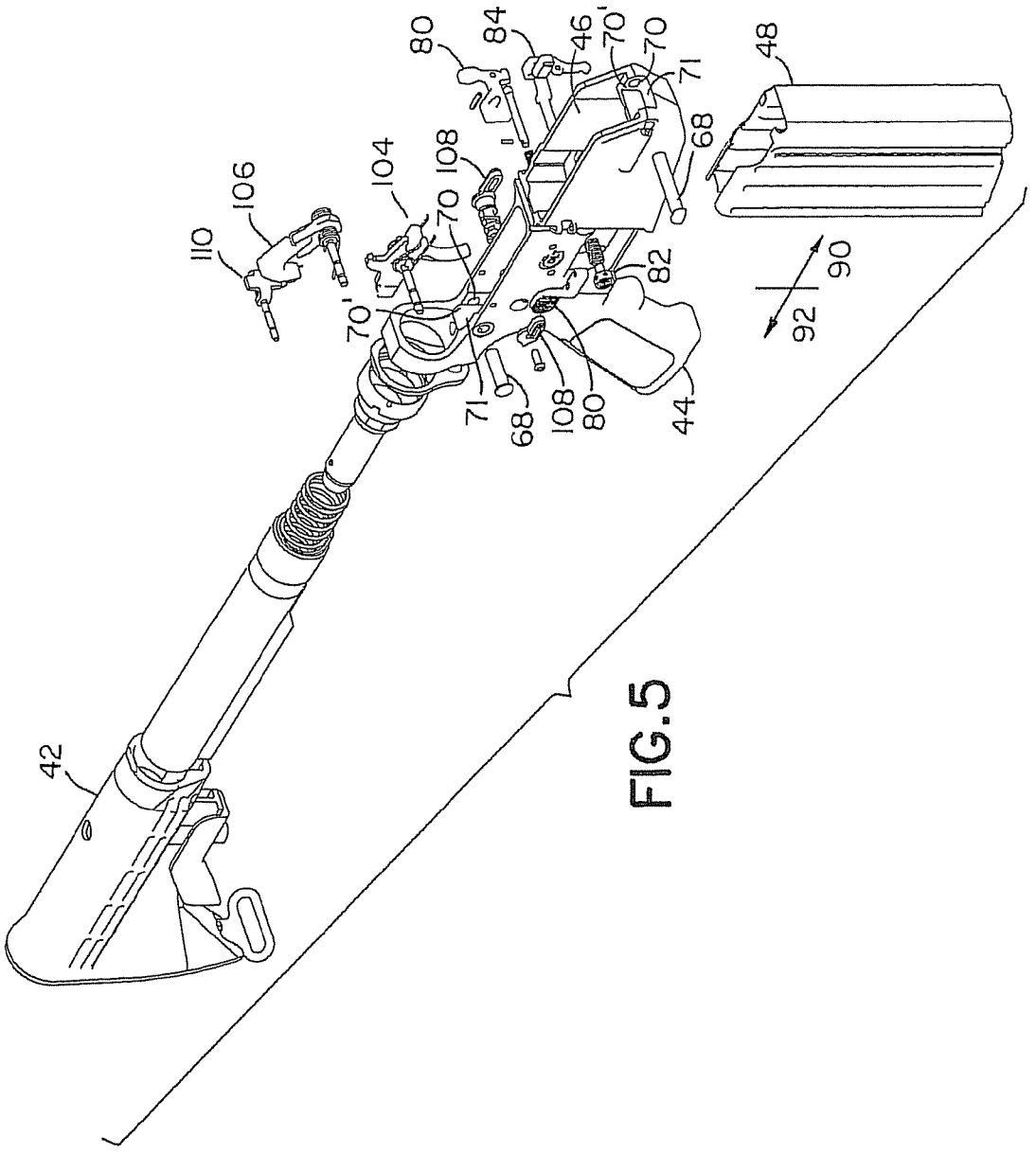
80
84
46
70'
70
71
48
68
104
108
106
110
70
70'
82
90
92
71
68
108
80
44
42

FIG. 5

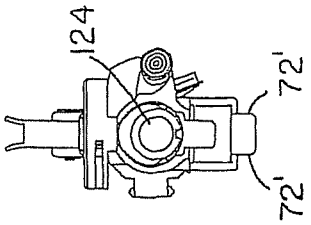

FIG.6A

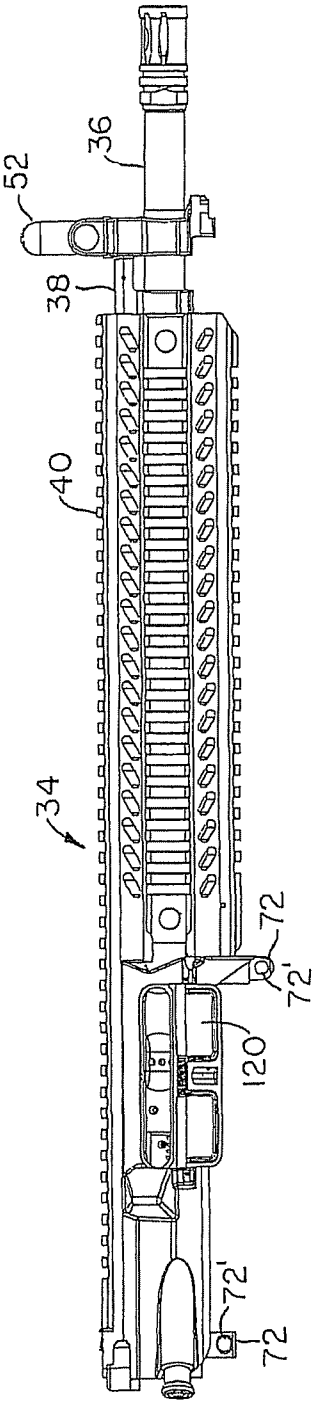

FIG.6B

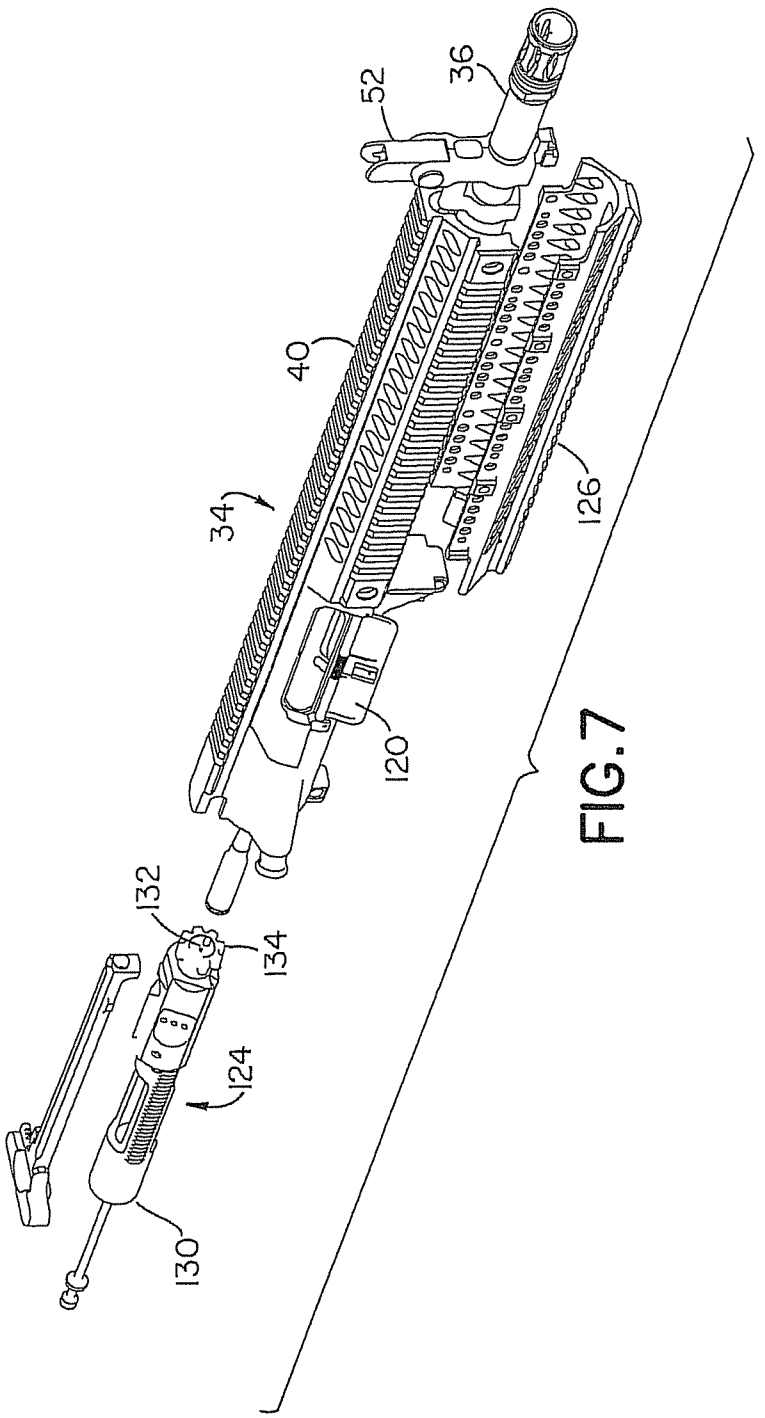

FIG. 7

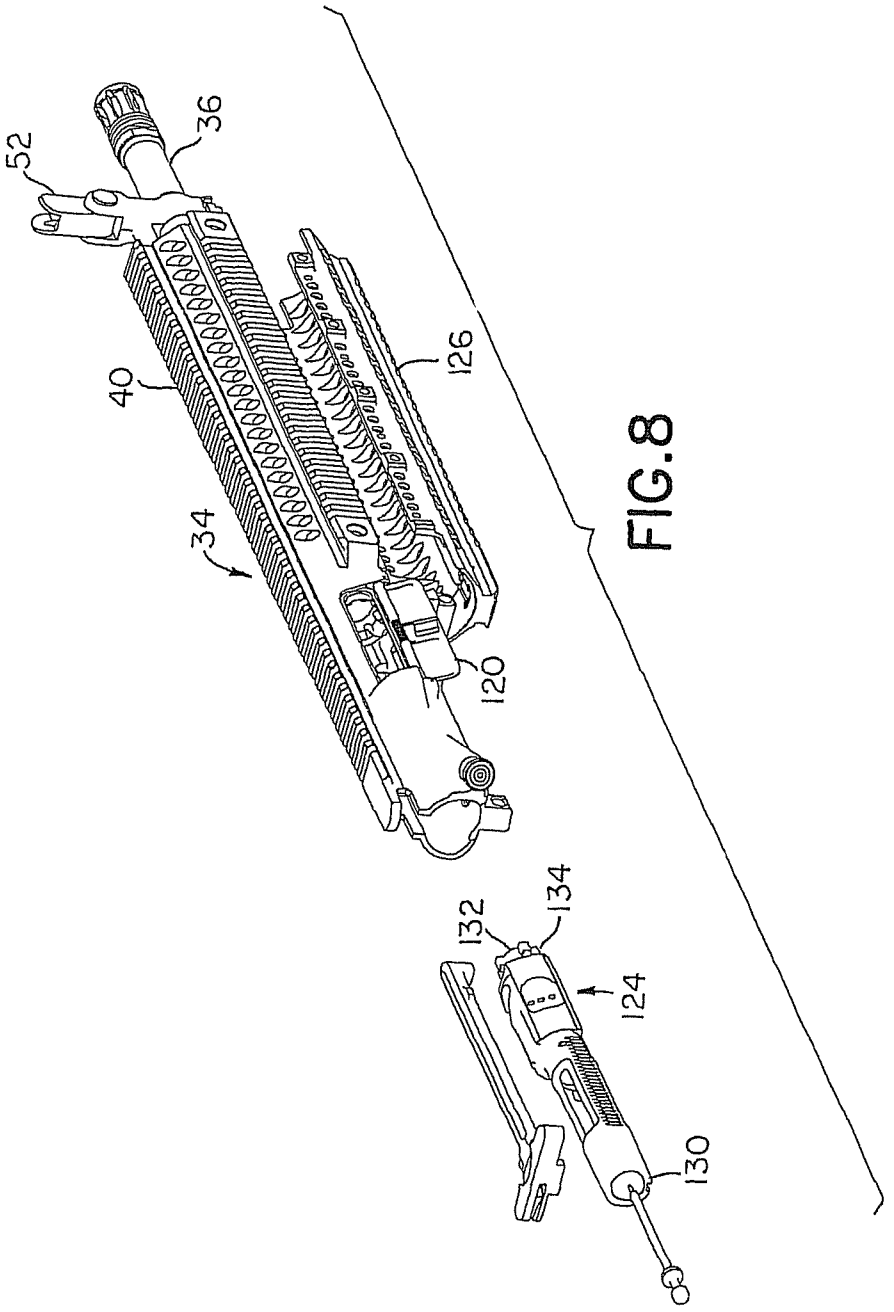

FIG.8

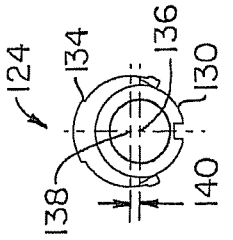

FIG.9B

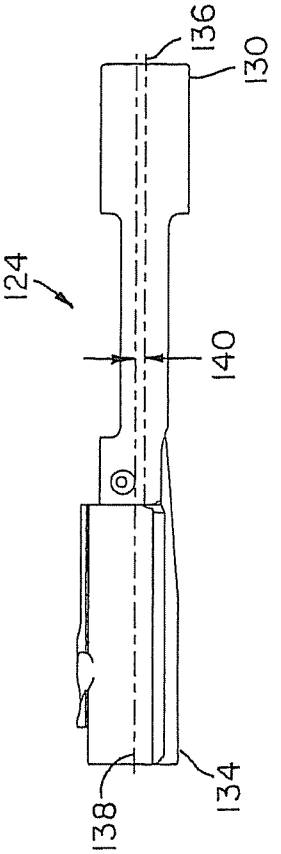

FIG.9A

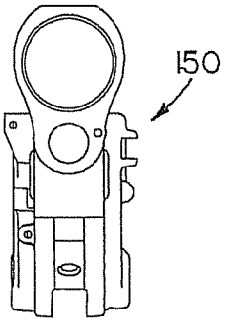

FIG. 10A

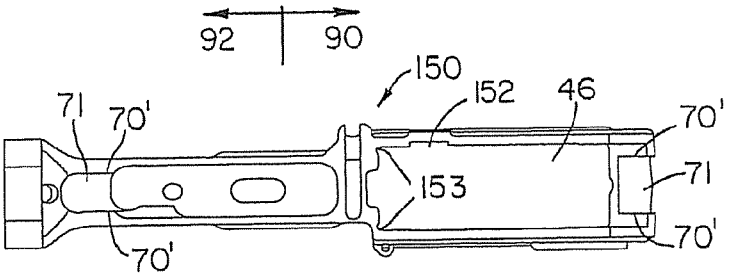

FIG. 10B

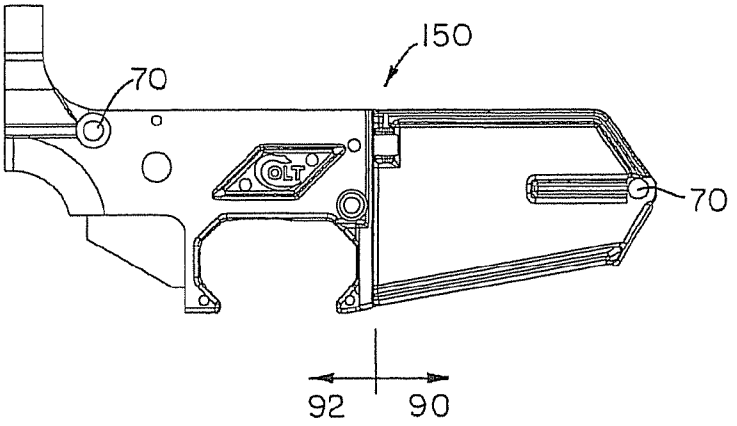

FIG. 10C

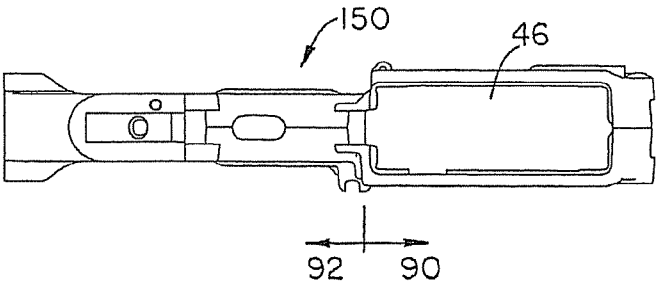

FIG. 10D

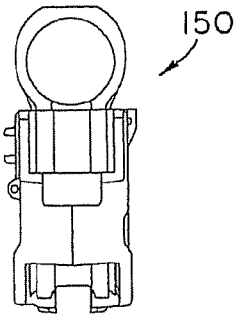

FIG. 10E

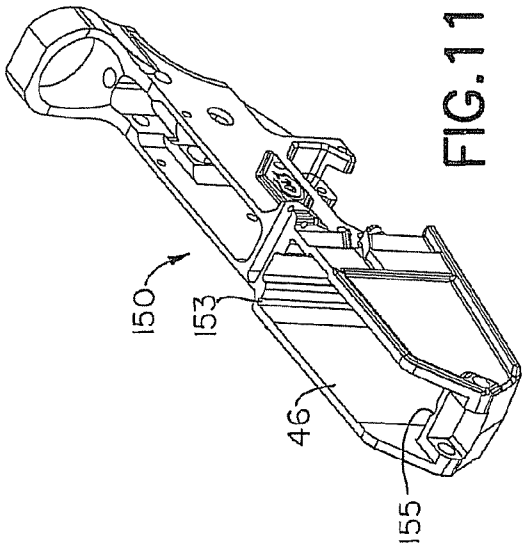

FIG. 11B

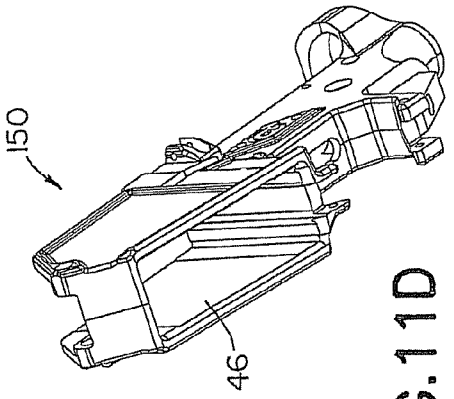

FIG. 11D

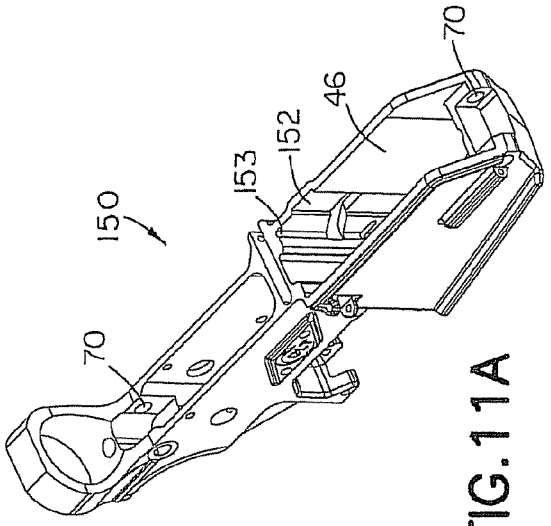

FIG. 11A

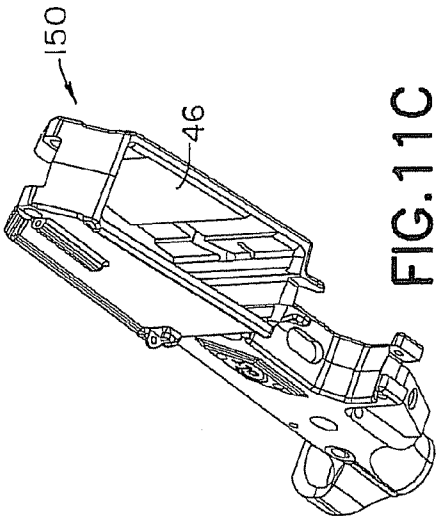

FIG. 11C

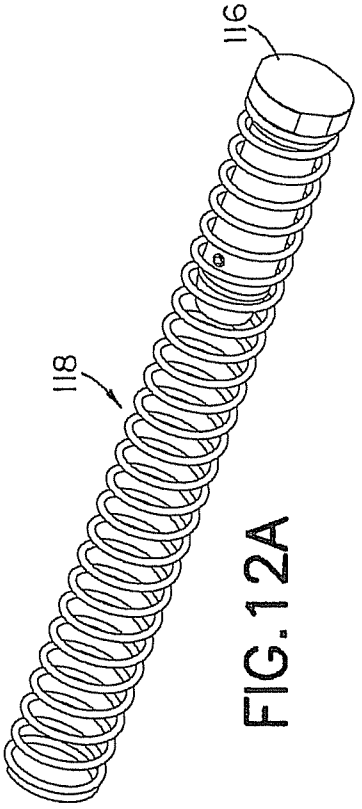

FIG. 12A

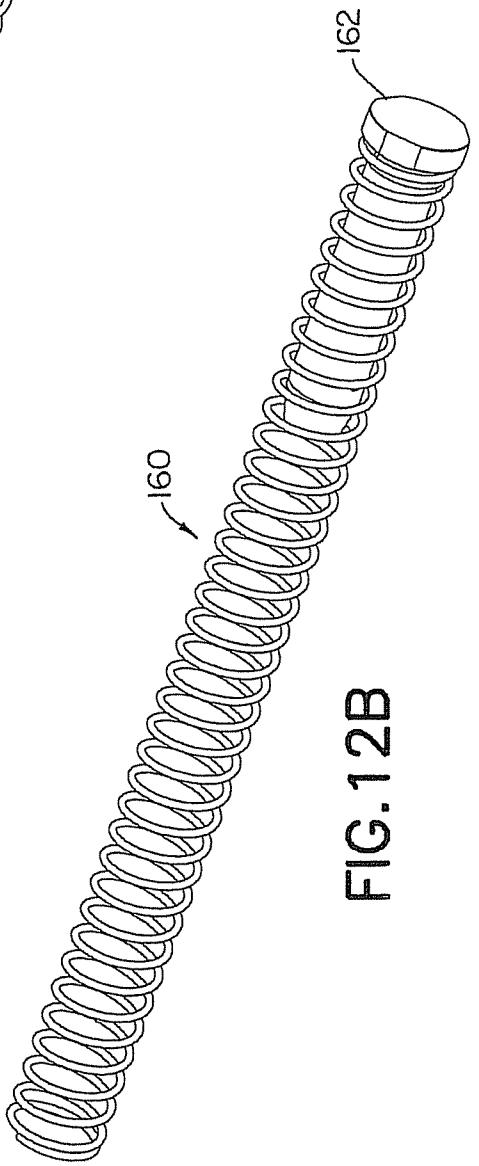

FIG. 12B

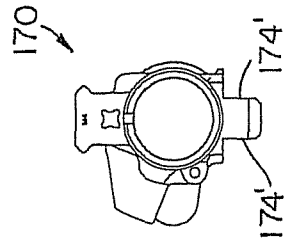

FIG. 13E

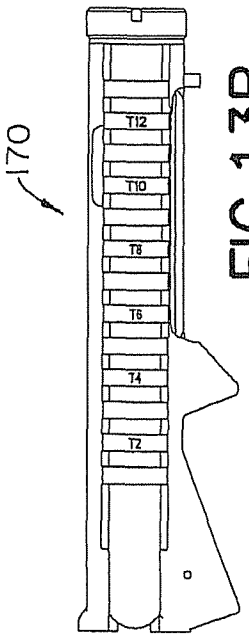

FIG. 13B

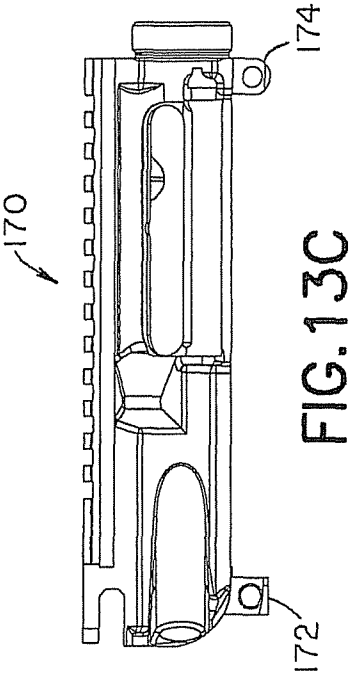

FIG. 13C

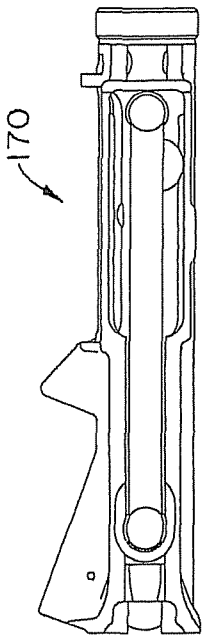

FIG. 13D

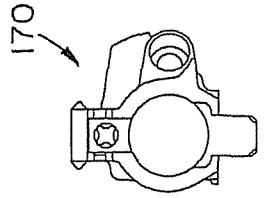

FIG. 13A

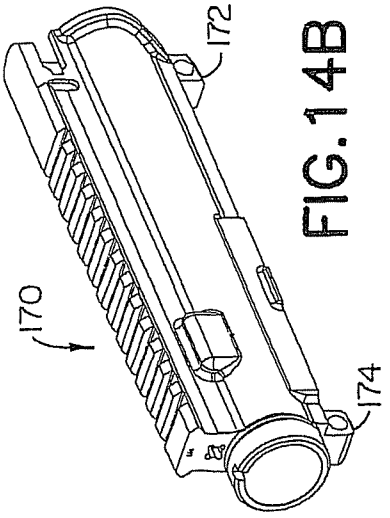

FIG. 14B

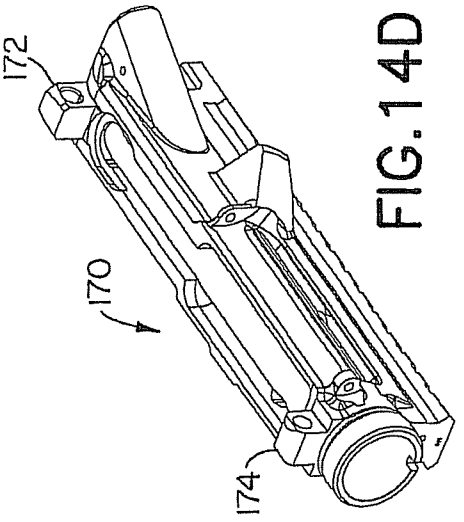

FIG. 14D

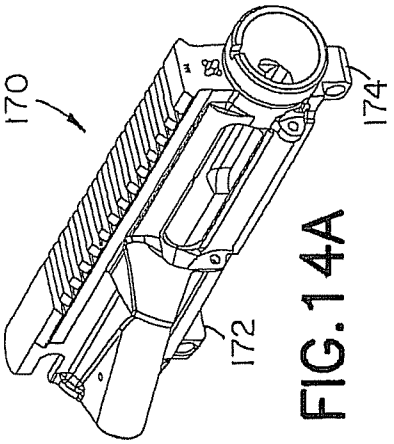

FIG. 14A

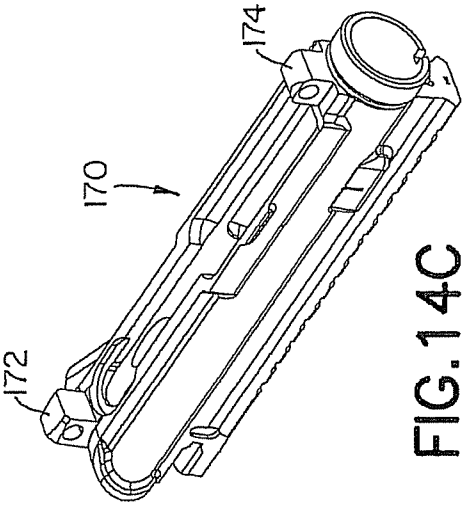

FIG. 14C

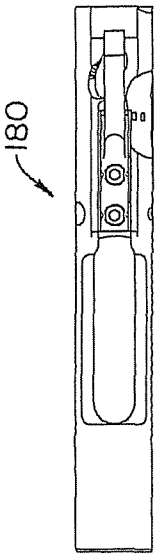

FIG. 15B

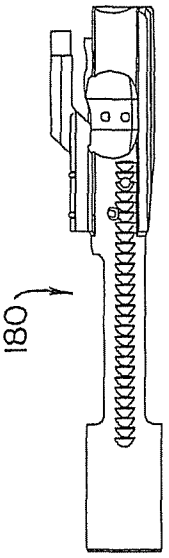

FIG. 15C

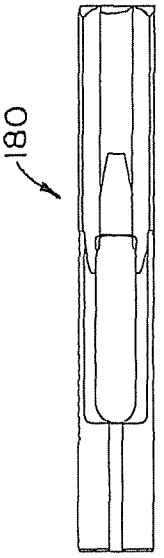

FIG. 15D

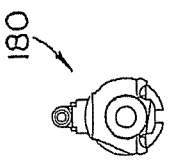

FIG. 15E

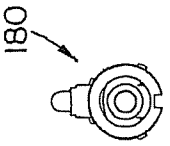

FIG. 15A

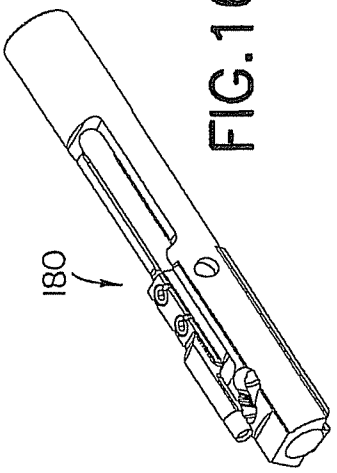

FIG. 16B

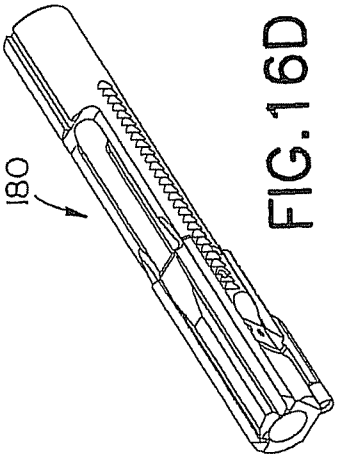

FIG. 16D

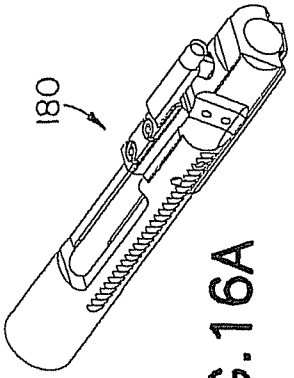

FIG. 16A

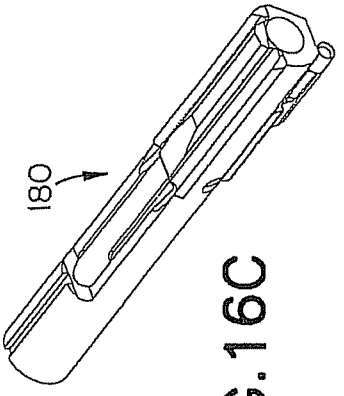

FIG. 16C

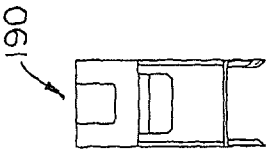

FIG. 17F

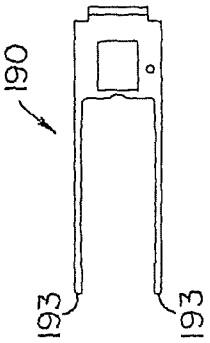

FIG. 17C

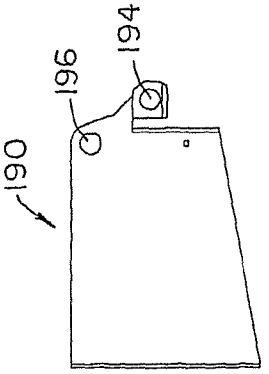

FIG. 17D

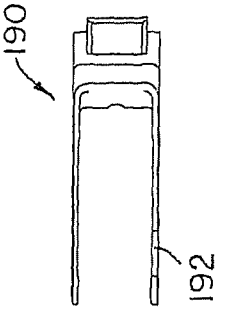

FIG. 17E

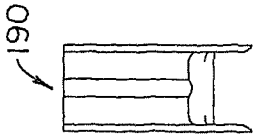

FIG. 17B

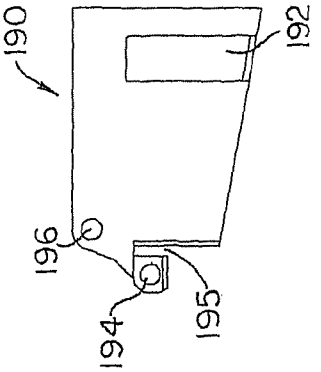

FIG. 17A

FIG.18A

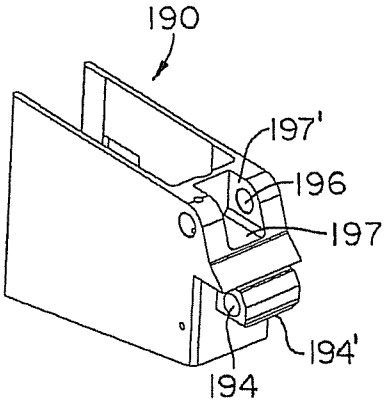

FIG.18B

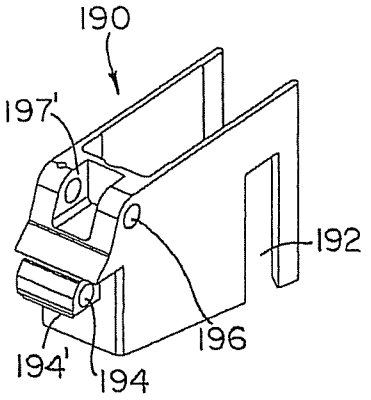

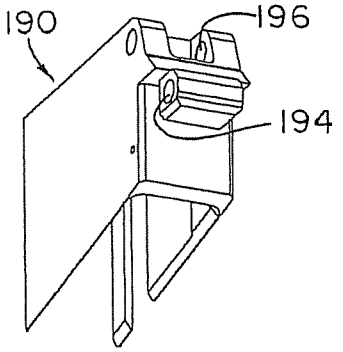

FIG.18C

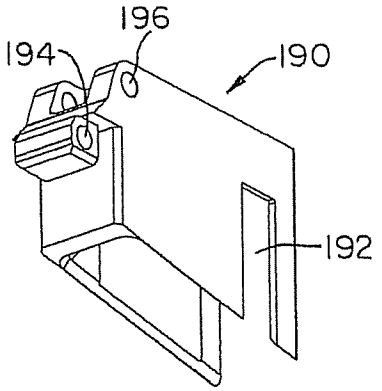

FIG.18D

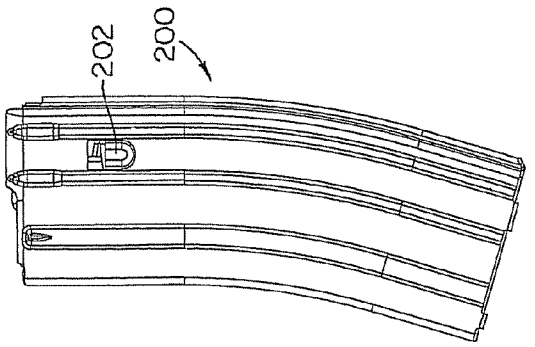

FIG.19F

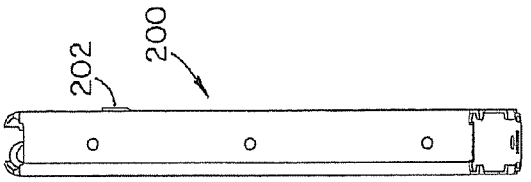

FIG.19E

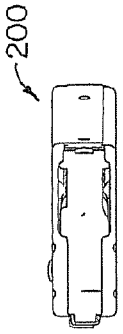

FIG.19B

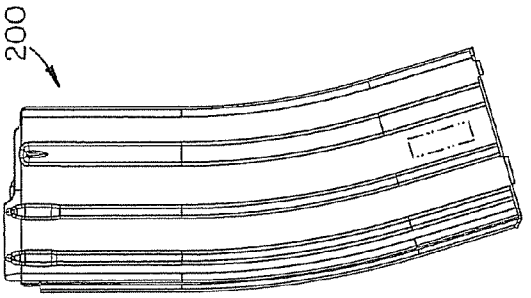

FIG.19C

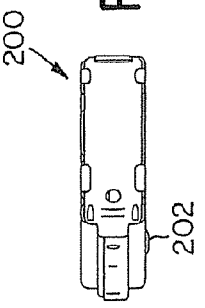

FIG.19D

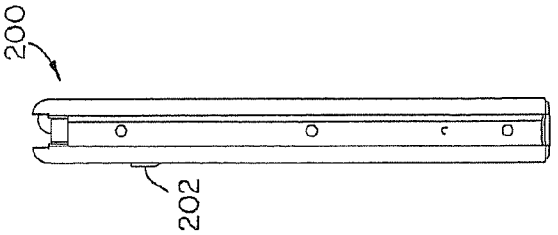

FIG.19A

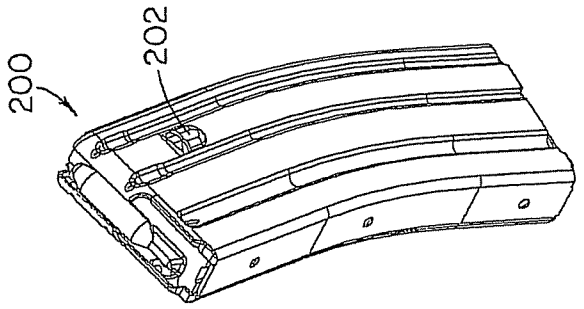

FIG.20B

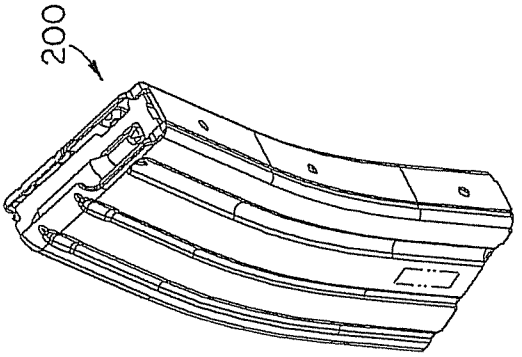

FIG.20A

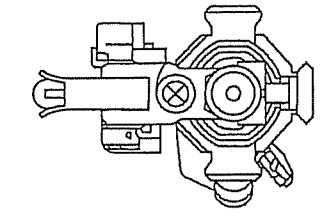

FIG.21A

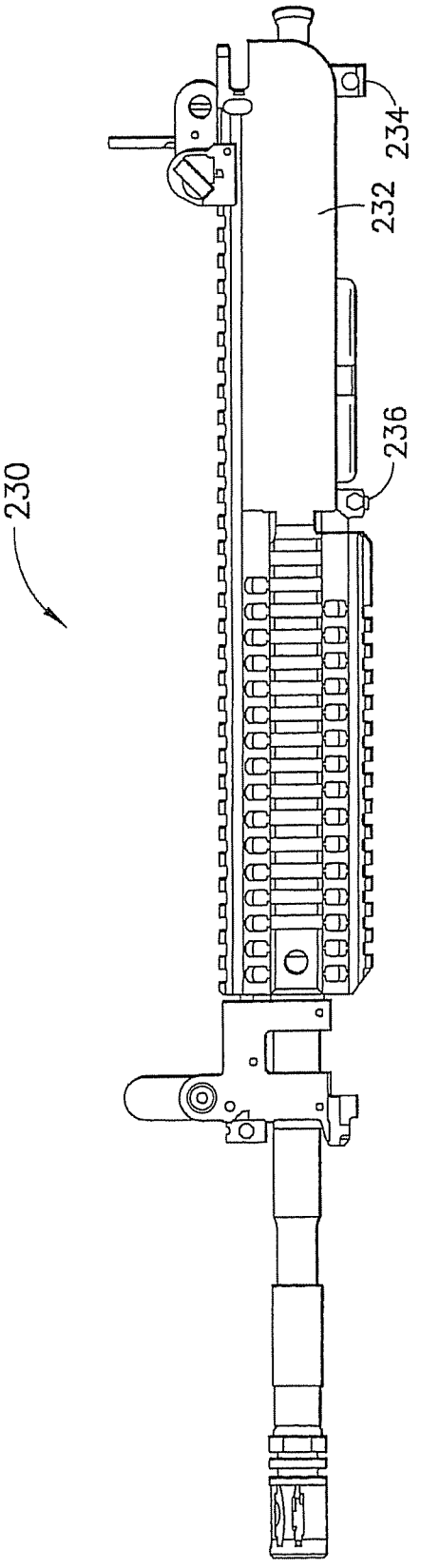

FIG.21B

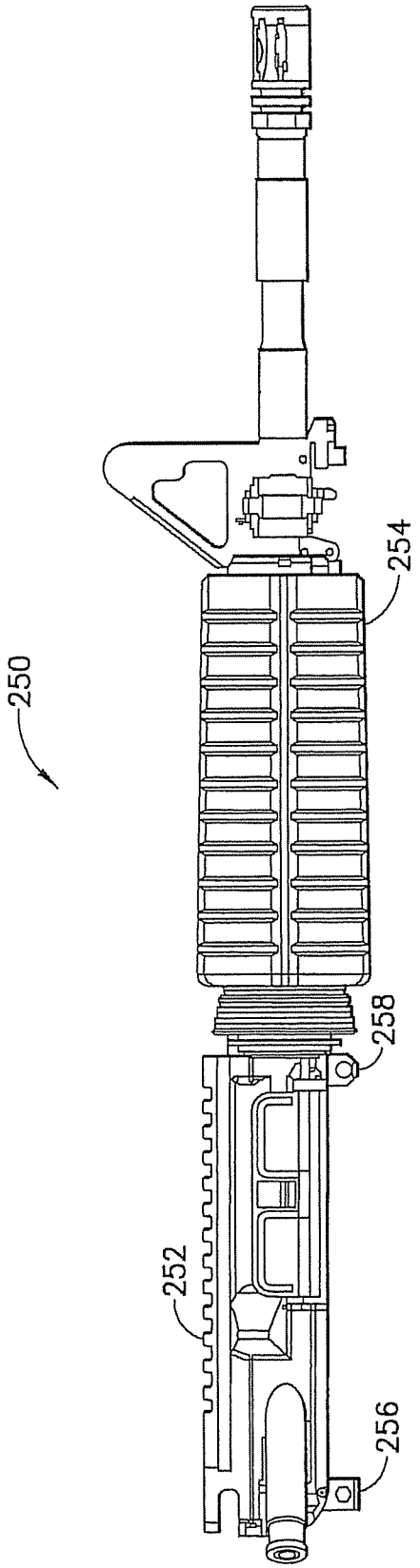

FIG.22A

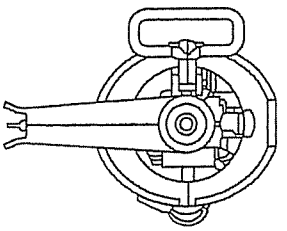

FIG.22B

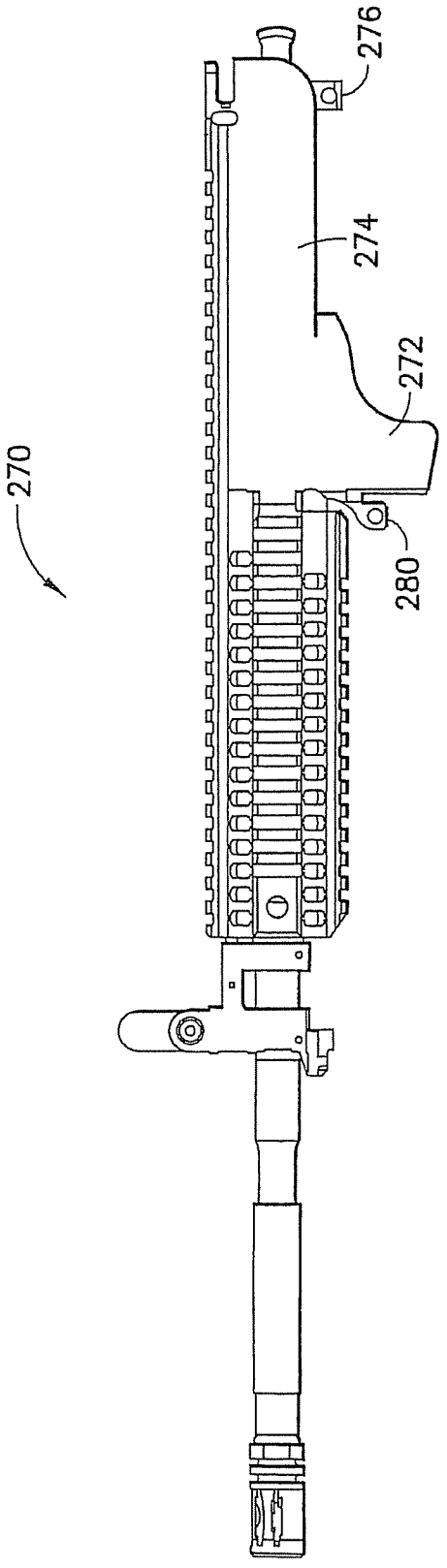

FIG.23

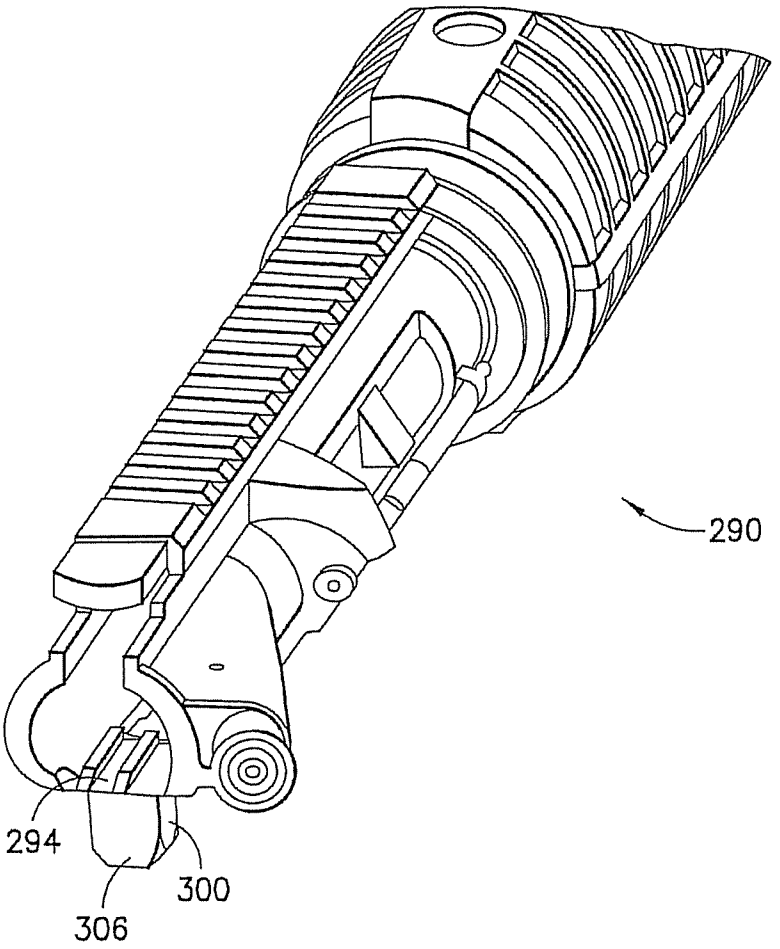

FIG.24

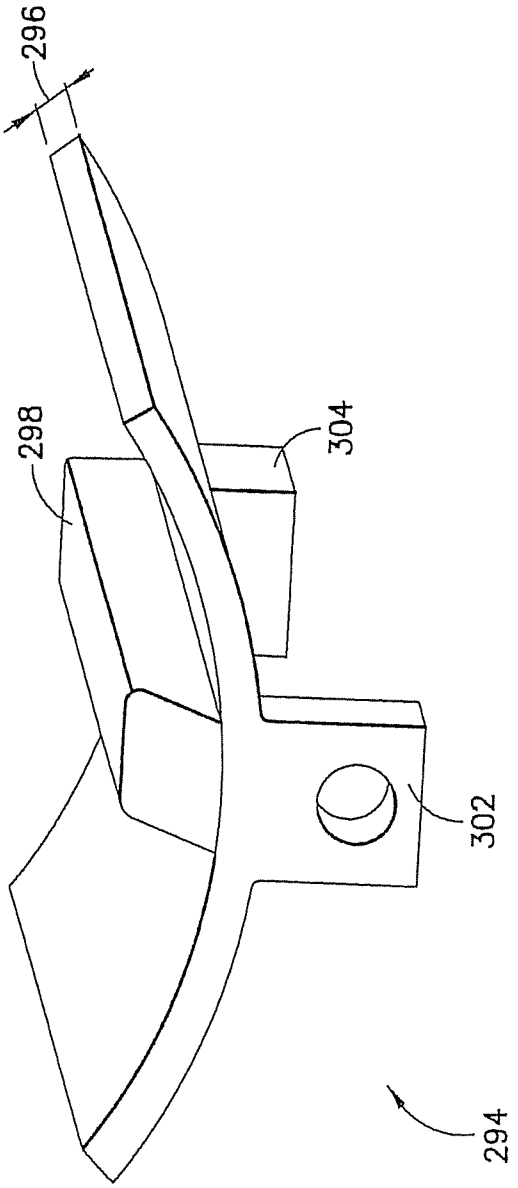

FIG.25

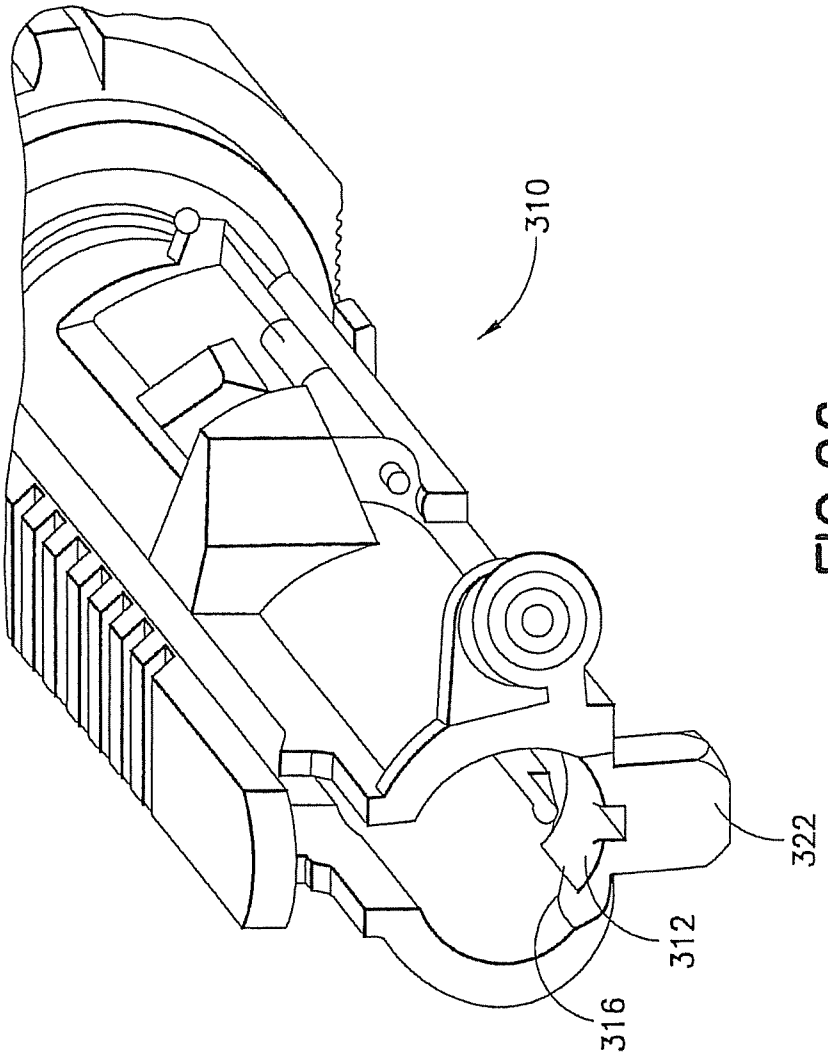

FIG.26

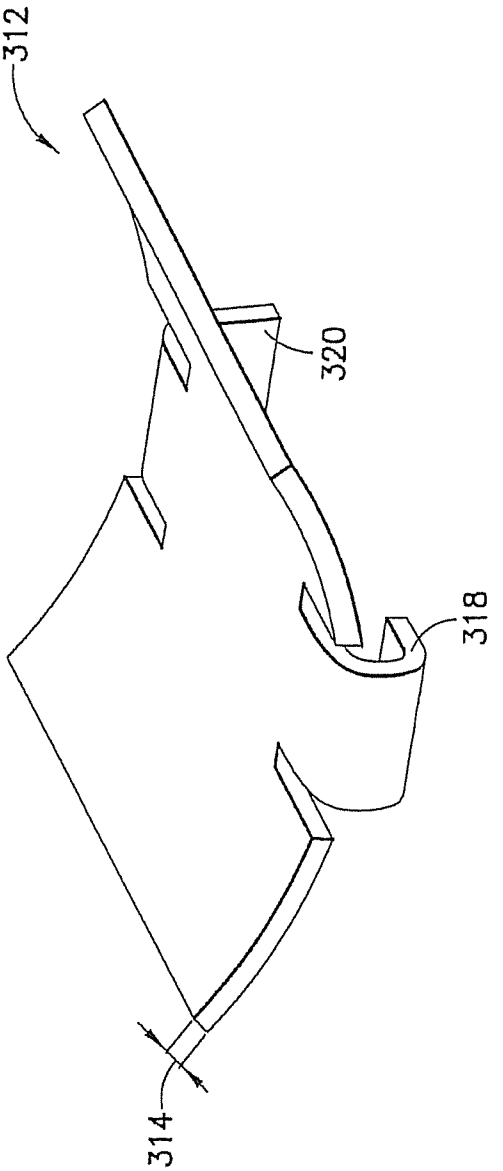

FIG.27

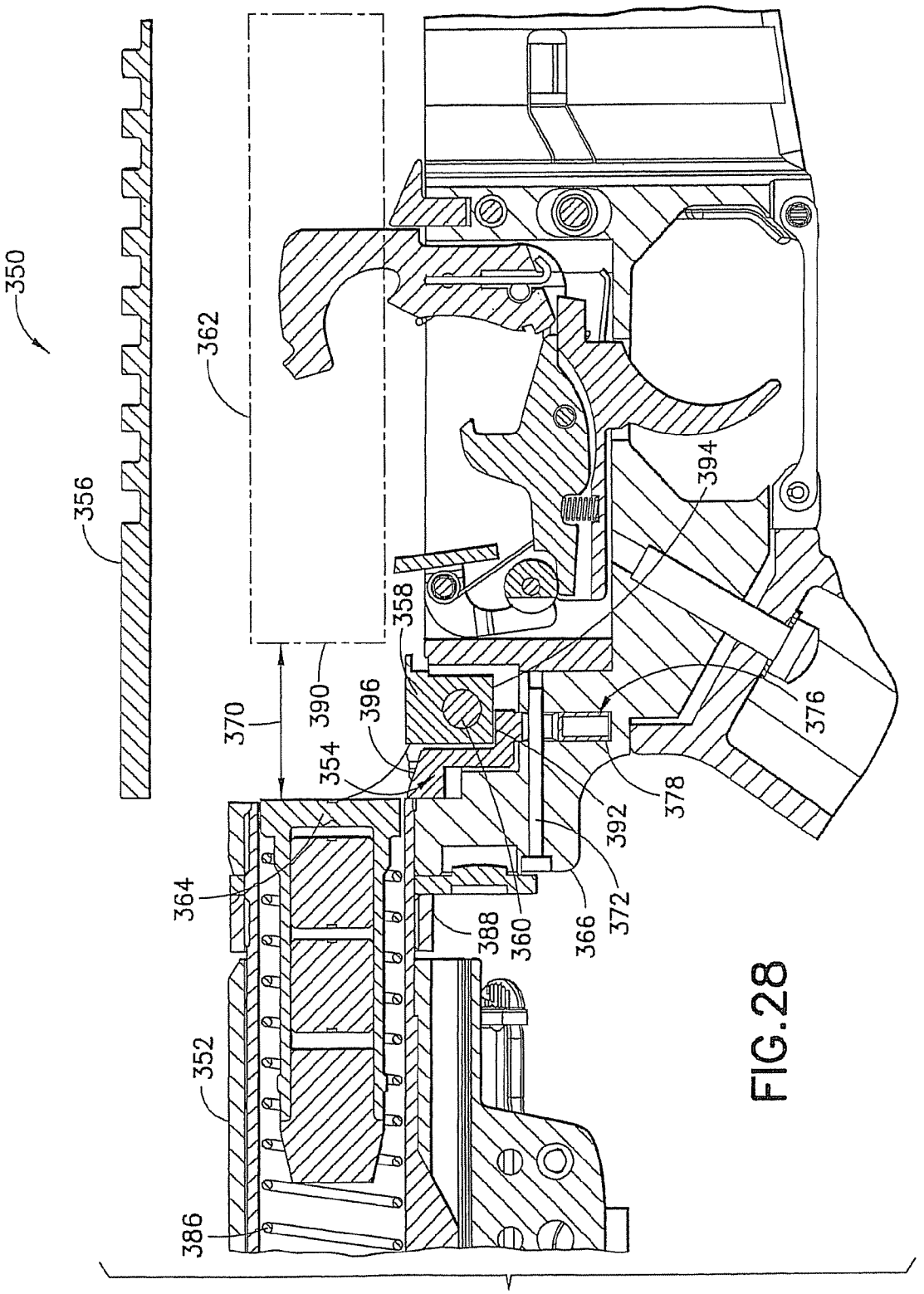
350
356
362
370
390
396
354
358
394
376
378
392
372
366
360
388
364
352
386

FIG.28

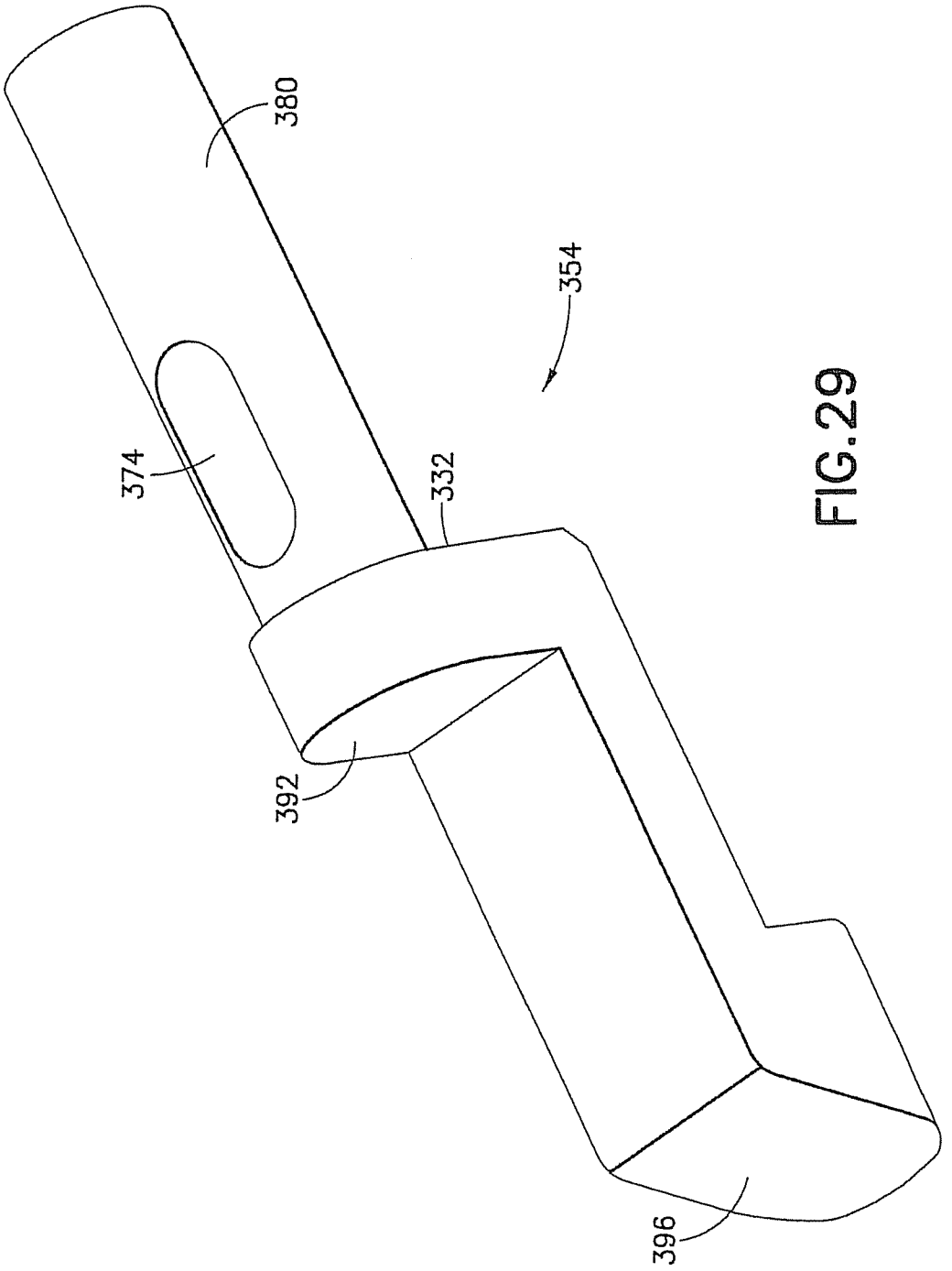

FIG.29

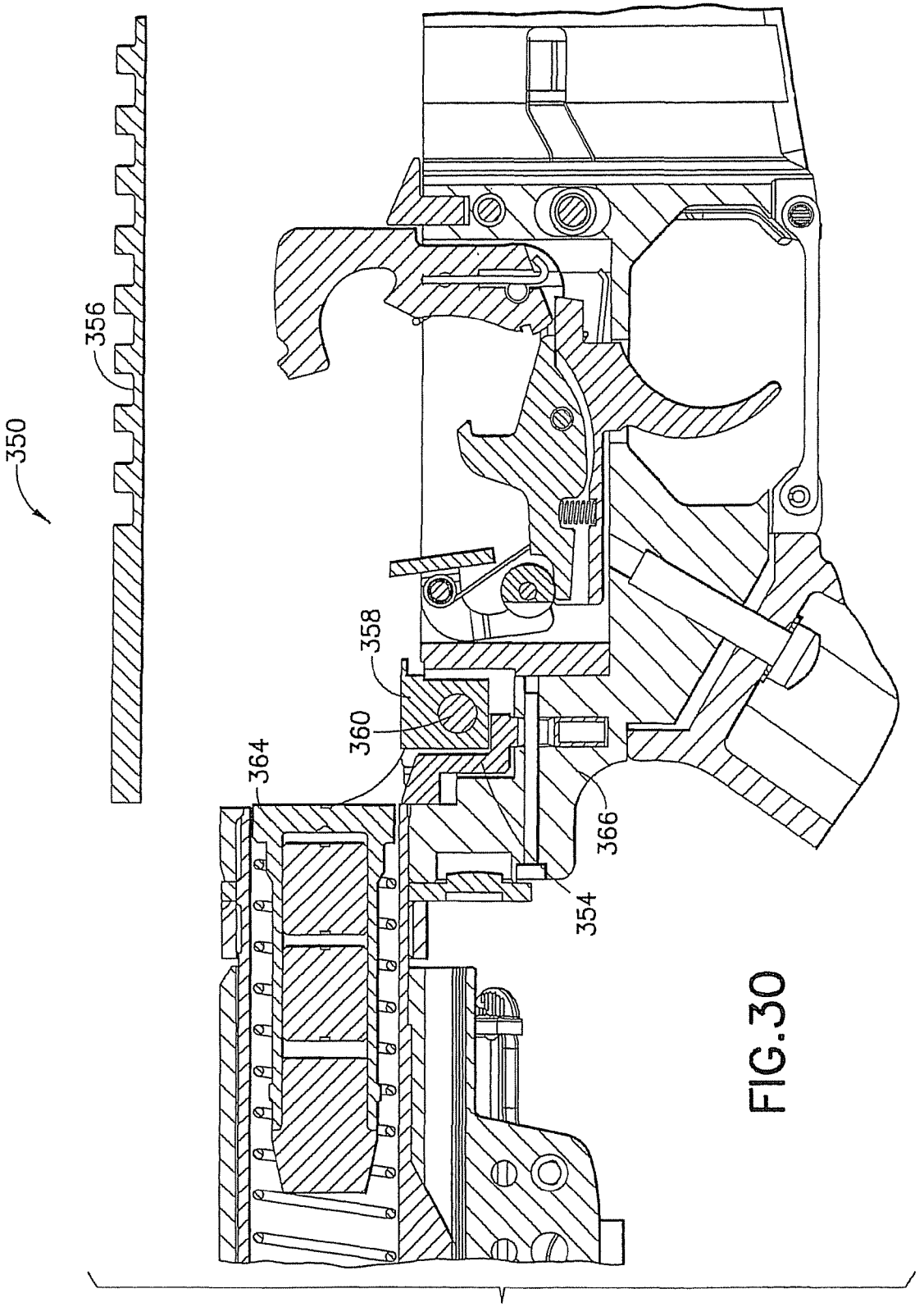

FIG.30

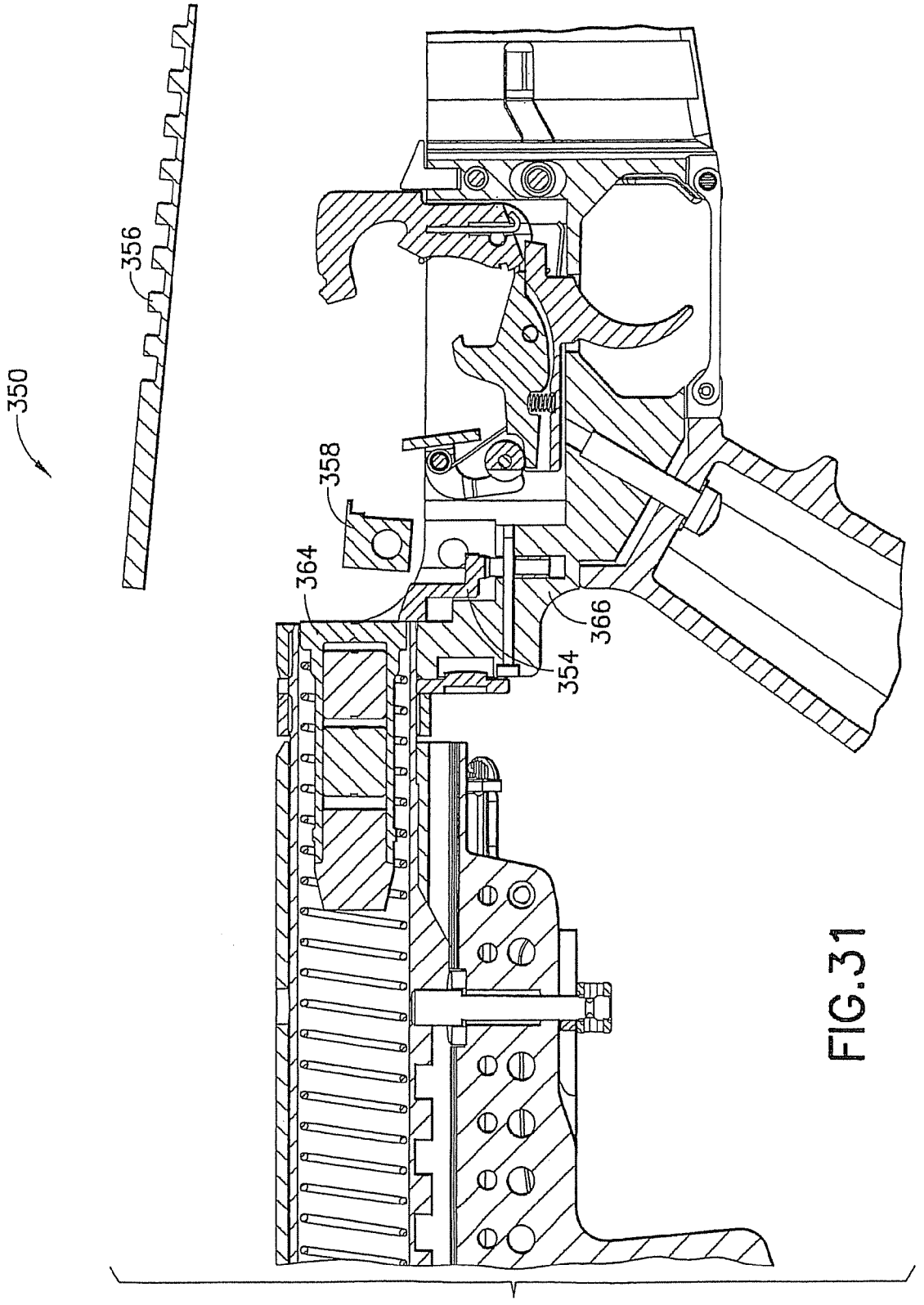

FIG. 31

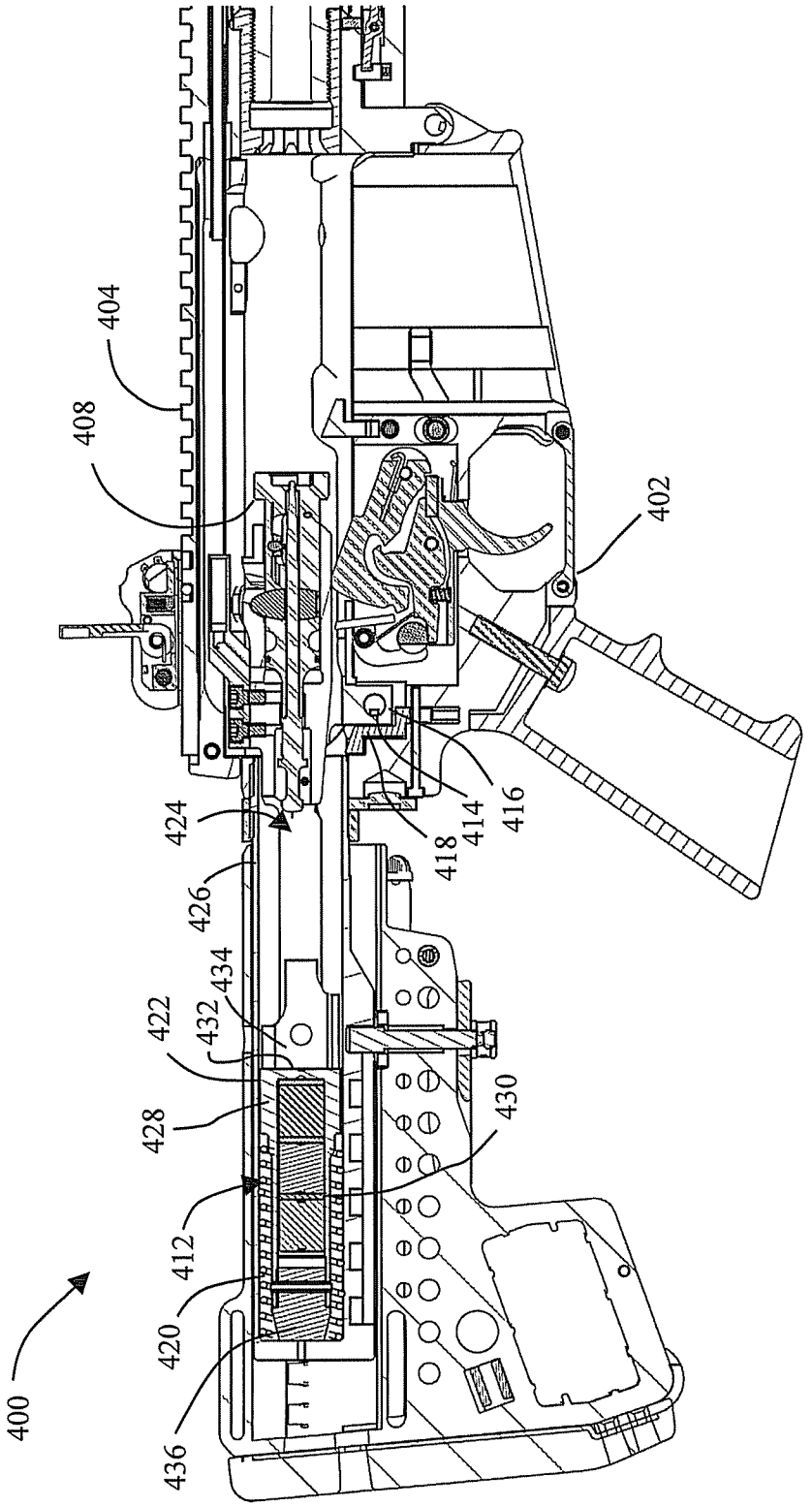
400
402
404
408
412
414
416
418
420
422
424
426
428
430
432
434
436

FIG. 32

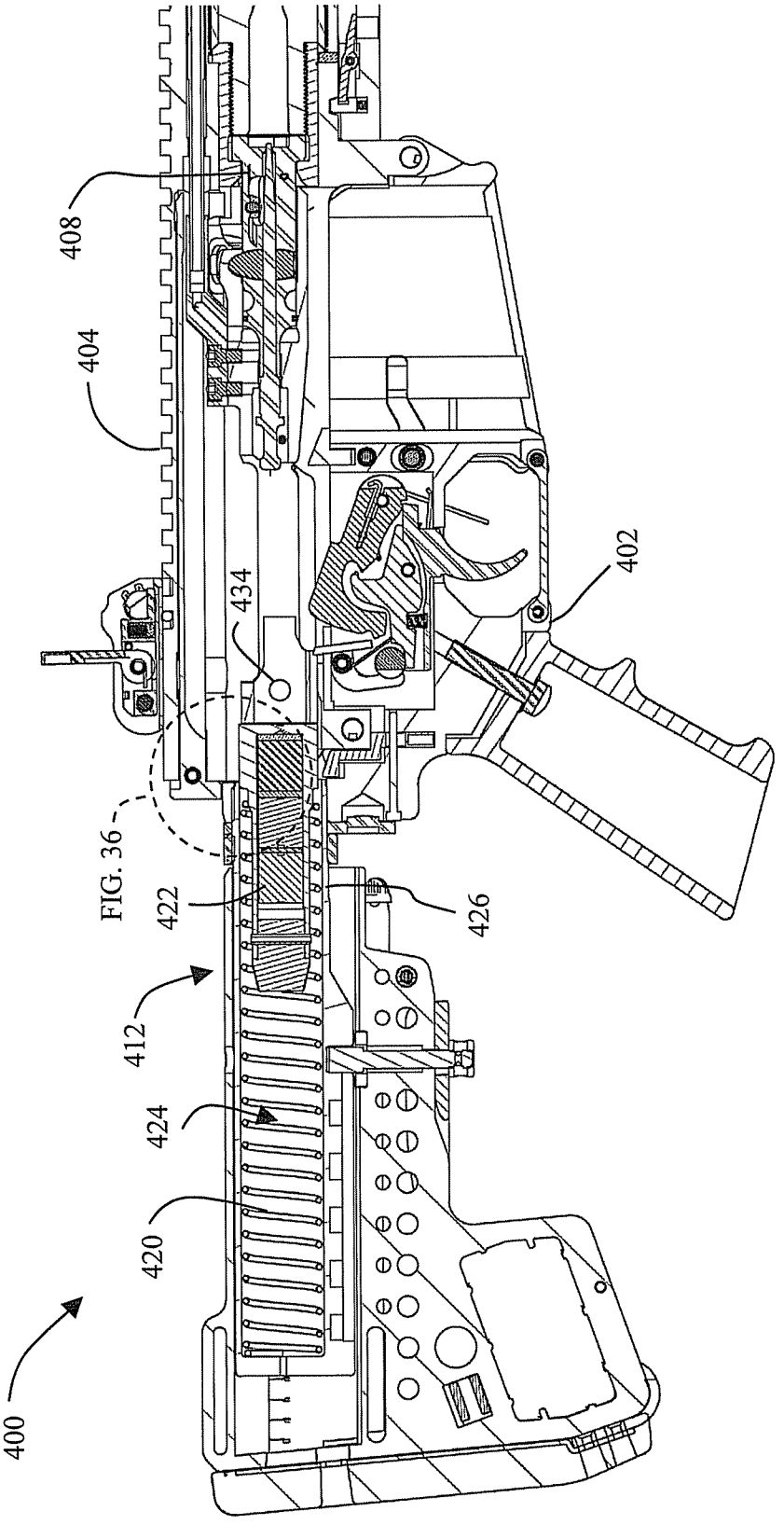

FIG. 33

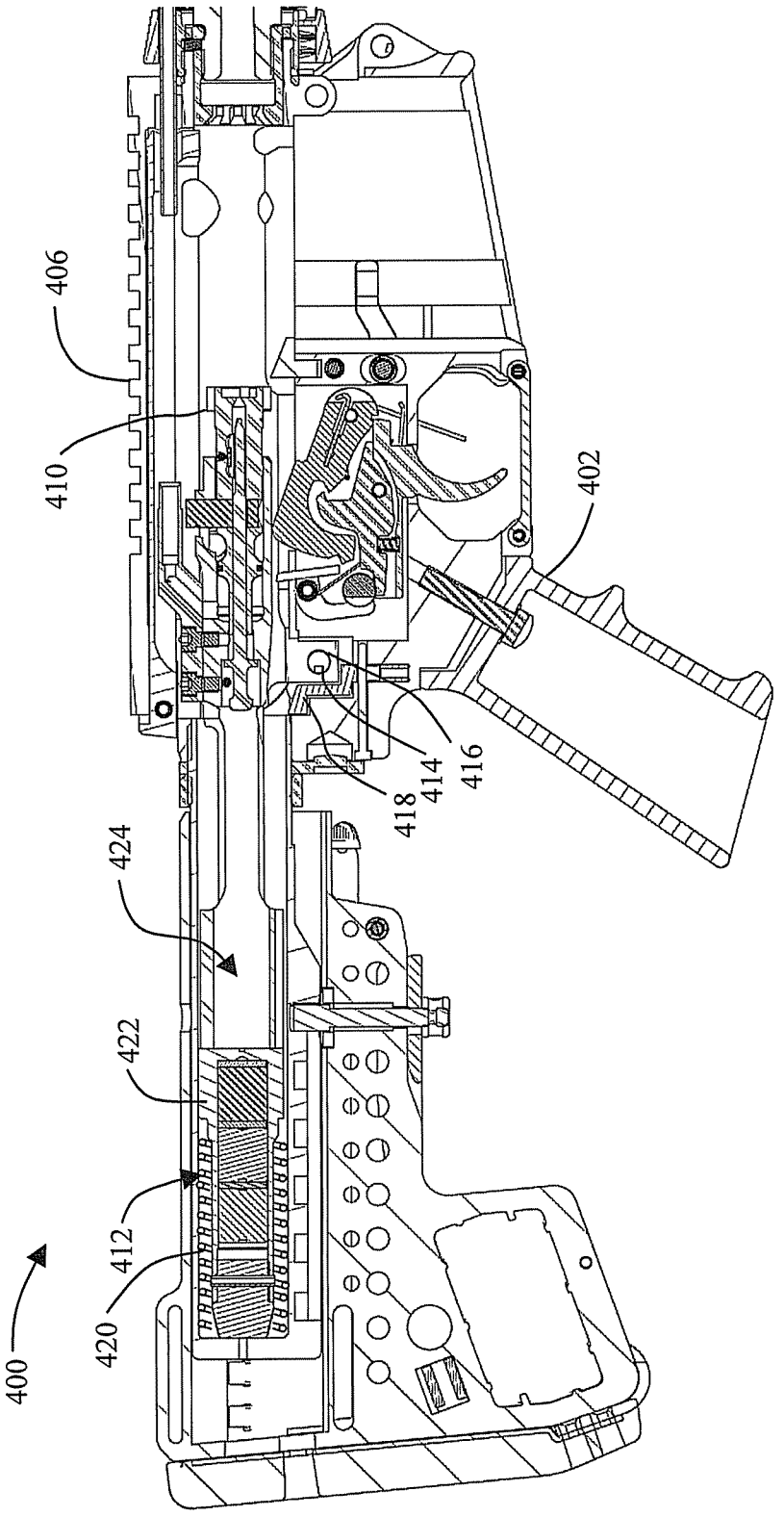

FIG. 34

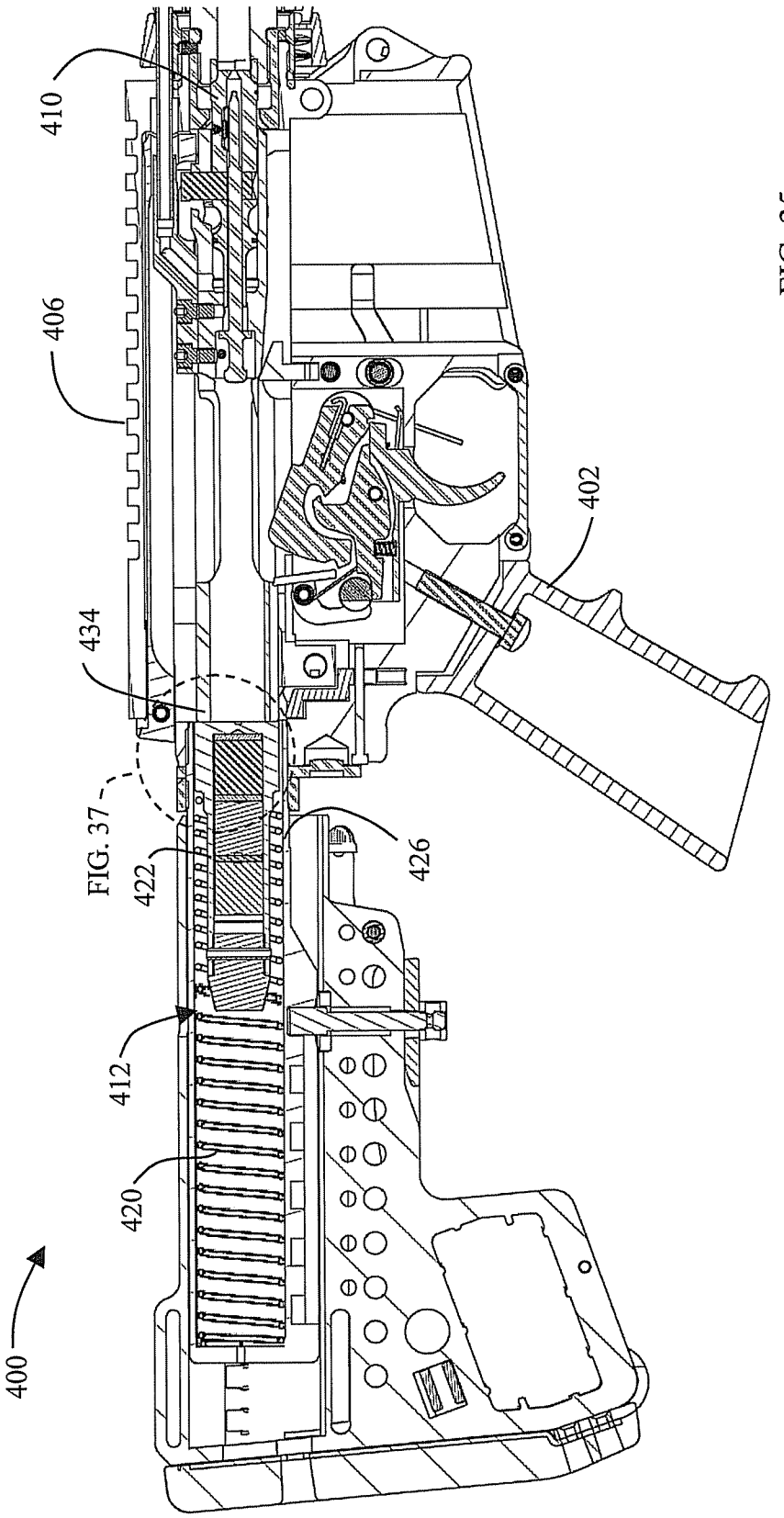

FIG. 35

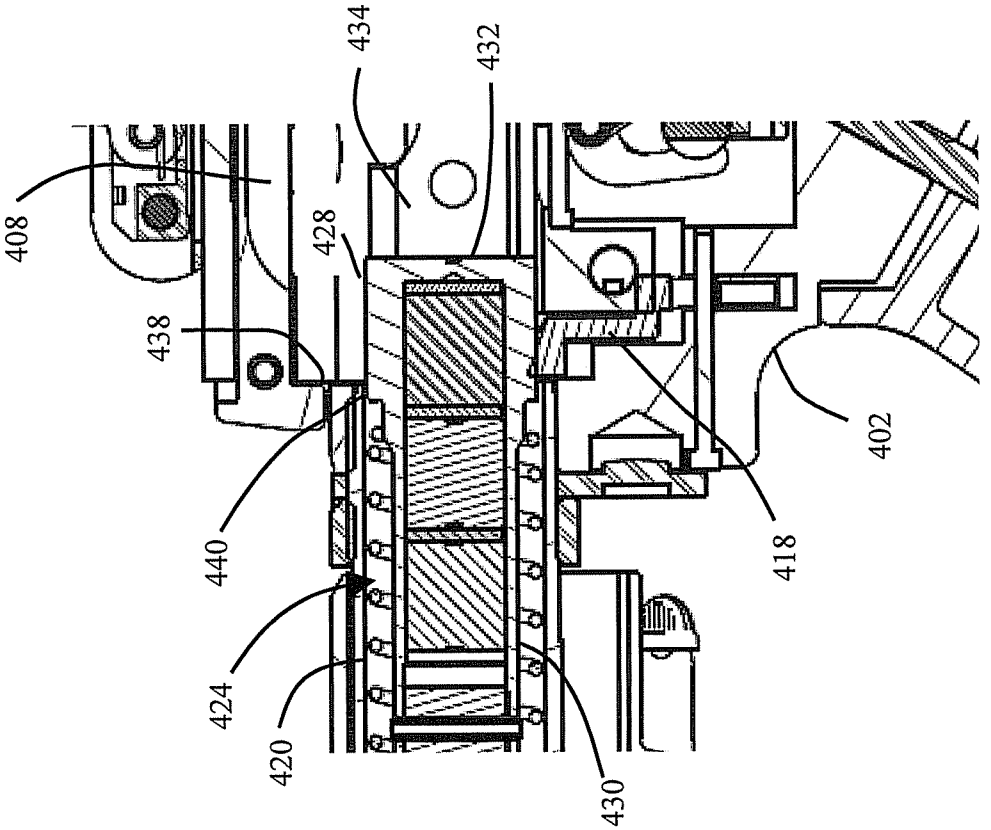

FIG. 36

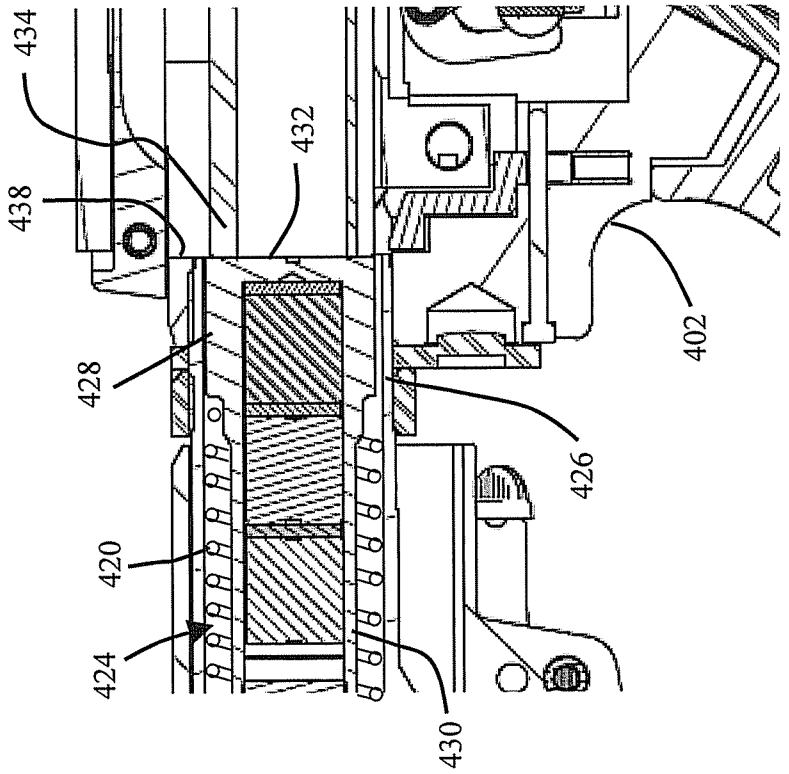

FIG. 37

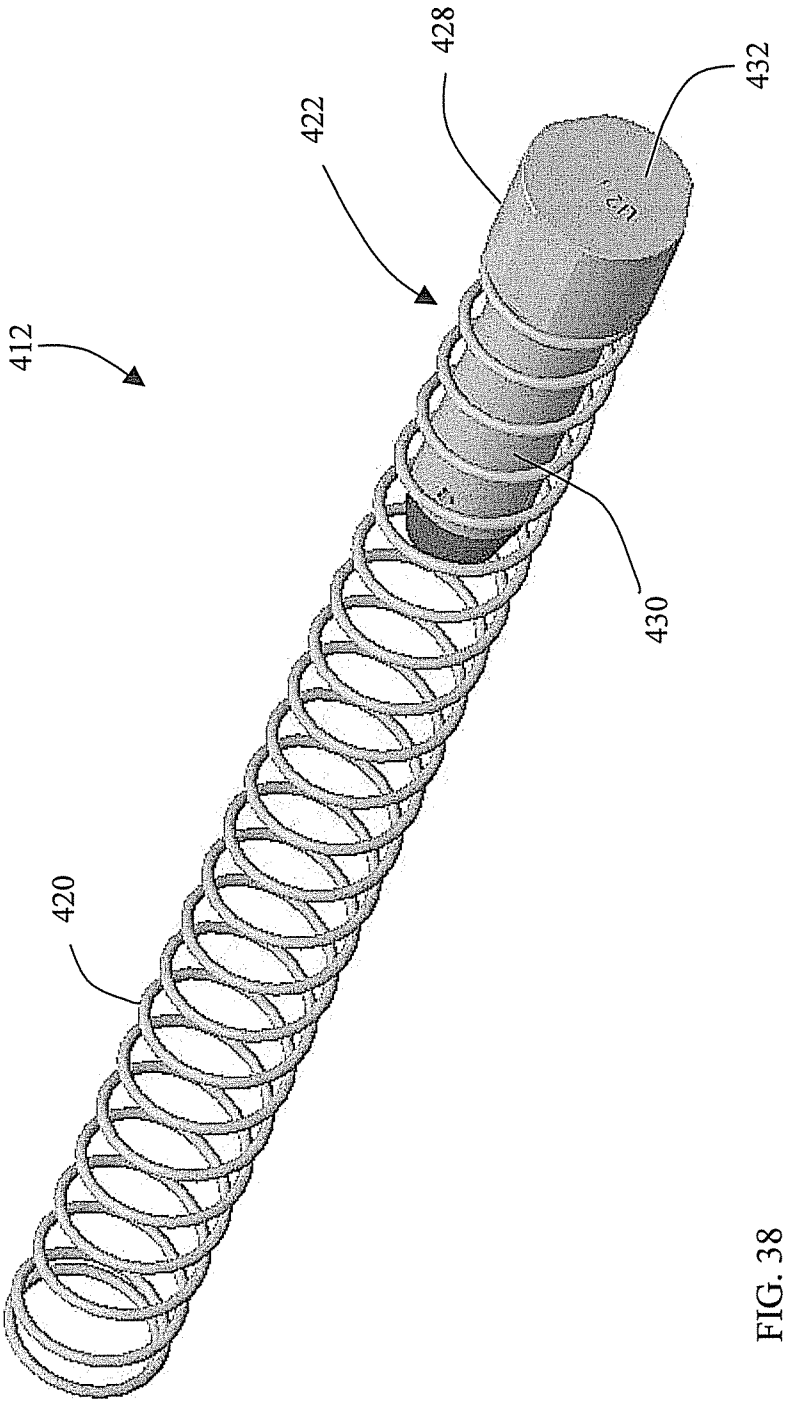

FIG. 38

MODULAR FIREARM

CROSS REFERENCE TO RELATED APPLICATIONS

The present application is a Continuation-In-Part of U.S. application Ser. No. 12/898,610 filed on Oct. 5, 2010, which claims the benefit of U.S. Provisional Application Ser. No. 61/248,786 filed Oct. 5, 2009, the contents each of which are incorporated herein by reference thereto.

This application also claims the benefit of U.S. Provisional Application Ser. No. 61/475,149 filed on Apr. 13, 2011, the contents of which are incorporated herein by reference thereto.

BACKGROUND OF THE INVENTION

The subject matter disclosed herein relates to modular firearms and, more particularly, modular automatic or semi-automatic firearms.

There are conventional semi-automatic or automatic firearms that are capable of firing a single fixed type of round, for example, a 7.62-51 (a.k.a. 7.62 mm NATO) round and commercially known as a .308 caliber round. If a user of the firearm desires to fire a different round, for example, a 5.56 mm NATO round, for other purposes such as in an environment where 5.56 mm NATO ammunition is more readily available, or for training or to save cost, the user is generally required to have a separate firearm capable of firing the different round. As such, with a fixed round capability, the cost and maintenance requirements for the two separate firearm types are poor.

Accordingly, while existing firearms are suitable for their intended purpose, it is desired to provide a firearm that has the advantages of a single firearm while being adaptable for firing multiple types of ammunition rounds.

BRIEF DESCRIPTION OF THE INVENTION

According to one aspect of the invention, a firearm is provided. The firearm includes a lower receiver having an extension portion with an opening. The lower receiver is configured to selectively couple with a first upper receiver and a second upper receiver. The first upper receiver is sized to receive a first bullet having a first caliber, the second upper receiver is sized to receive a second bullet having a second caliber, the second caliber being larger than the first caliber. A buffer assembly is disposed at least partially within the opening. The buffer assembly includes a biasing member and a buffer member. The buffer member is movable between a first position, a second position and a third position. Wherein the buffer member is movable between the first position and the second position when the first upper receiver is coupled to the lower receiver and movable between the first position and the third position when the second upper receiver is coupled to the lower receiver.

According to another aspect of the invention, another firearm is provided. The firearm includes a lower receiver having an extension portion with an opening having a first end and a second end. The lower receiver is configured to selectively couple with a plurality of upper receivers, wherein each of the plurality of upper receivers is configured to receiver a bullet having a different caliber. A biasing member is disposed within the opening, the biasing member having a third end and a fourth end, the third end being in contact with the second end. A buffer member having a first portion is operably coupled to the fourth end. The buffer member includes a second portion having a diameter sized to axially align the buffer member within the opening. Wherein the buffer member is movable between a first position and a plurality of extended positions, and wherein each of the plurality of extended positions is associated with at least one of the plurality of upper receivers, wherein the second portion is at least partially disposed within the opening in each of the plurality of extended positions.

According to yet another aspect of the invention, a method of operating a firearm is provided. The method includes the step of coupling a first upper receiver to a lower receiver, the lower receiver having an extension portion having an opening, the first upper receiver having a first bolt carrier assembly. A buffer member is moved from a first position to a second position, the buffer member being at least partially disposed within the opening. The first upper receiver is removed. A second upper receiver is coupled to the lower receiver, the second upper receiver having a second bolt carrier assembly. The buffer member is moved from the first position to a third position within the opening.

These and other advantages and features will become more apparent from the following description taken in conjunction with the drawings.

BRIEF DESCRIPTION OF THE DRAWING

The subject matter, which is regarded as the invention, is particularly pointed out and distinctly claimed in the claims at the conclusion of the specification. The foregoing and other features, and advantages of the invention are apparent from the following detailed description taken in conjunction with the accompanying drawings in which:

FIG. **1**A is a side view of an exemplary embodiment of an automatic or semi-automatic firearm and system incorporating features as described further herein;

FIG. **1**B is another side view of the automatic or semi-automatic firearm in FIG. **1**A, illustrating the firearm and system components in a disassembled configuration;

FIG. **1**C is an elevation or side view of a magazine adapter in accordance with an exemplary embodiment;

FIG. **1**D is another side view of the automatic or semi-automatic firearm arranged in one configuration in accordance with the exemplary embodiment;

FIG. **2** is an exploded isometric view of the firearm shown in FIG. **1**D;

FIG. **3** is another exploded isometric view of the firearm shown in FIG. **1**D;

FIG. **4** is an exploded isometric view of the lower receiver of the firearm shown in FIG. **1**D;

FIG. **5** is another exploded isometric view of the lower receiver of the firearm shown in FIG. **1**D;

FIGS. **6**A and **6**B are respectively rear and right side views of a first upper receiver of the firearm capable of firing a round of a first caliber shown in FIG. **1**D;

FIG. **7** is an exploded isometric view of the first upper receiver of the firearm shown in FIG. **1**D;

FIG. **8** is an exploded isometric view of the first upper receiver of the firearm shown in FIG. **1**D;

FIGS. **9**A and **9**B and are respectively side and rear views of the first bolt carrier used with the first upper receiver of the firearm shown in FIG. **1**D;

FIGS. **10**A, **10**B, **10**C, **10**D and **10**E are respectively rear, top, side, bottom and front views of the lower receiver housing of the firearm shown in FIG. **1**D;

FIGS. **11**A-**11**D are isometric views of the lower receiver housing of the firearm shown in FIG. **1**D;

FIG. **12**A is an isometric view of a first main action spring used with the first bolt carrier;

FIG. **12**B is an isometric view of a second main action spring;

FIGS. **13**A, **13**B, **13**C, **13**D and **13**E are respectively rear, top, side, bottom and front views of a second upper receiver housing configured for firing a round of a second caliber;

FIGS. **14**A-**14**D are isometric views of the second upper receiver housing;

FIGS. **15**A, **15**B, **15**C, **15**D and **15**E are respectively rear, top, side, bottom and front views of a second bolt carrier;

FIGS. **16**A-**16**D are isometric views of the second bolt carrier;

FIGS. **17**A, **17**B, **17**C, **17**D, **17**E and **17**F are respectively left, side, rear, top, right side, bottom and front views of an interface adapter;

FIGS. **18**A-**18**D are isometric views of the 7.62 mm to 5.56 mm interface adapter;

FIGS. **19**A, **19**B, **19**C, **19**D, **19**E and **19**F are respectively rear, top, right side, bottom, front, and left side views of a 5.56 mm magazine;

FIGS. **20**A and **20**B are isometric views of the 5.56 mm magazine;

FIG. **21**A is an end view of a 5.56 mm upper receiver;

FIG. **21**B is a side view of a 5.56 mm upper receiver;

FIG. **22**A is a side view of a 5.56 mm upper receiver;

FIG. **22**B is an end view of a 5.56 mm upper receiver;

FIG. **23** is a side view of a dedicated 5.56 mm upper receiver;

FIG. **24** is an isometric view of an upper receiver;

FIG. **25** is an isometric view of a skid plate;

FIG. **26** is an isometric view of an upper receiver;

FIG. **27** is an isometric view of a skid plate;

FIG. **28** is a section view of a firearm;

FIG. **29** is an isometric view of a buffer detent;

FIG. **30** is a section view of a firearm;

FIG. **31** is a section view of a firearm;

FIG. **32** is a partial section view of an embodiment of a firearm having a common lower receiver with a common buffer in a first position, the firearm having a first interchangeable upper receiver;

FIG. **33** is a partial sectional view of the firearm of FIG. **32** with the common buffer in a second position;

FIG. **34** is a partial section view of the firearm of FIG. **32** having a second interchangeable upper receiver with the common buffer the first position;

FIG. **35** is a partial sectional view of the firearm of FIG. **34** with the common buffer in a third position;

FIG. **36** is partial sectional view of a portion of FIG. **33**;

FIG. **37** is a partial sectional view of a portion of FIG. **35**; and,

FIG. **38** is a perspective view of the buffer assembly of FIGS. **32-37**.

The detailed description explains embodiments of the invention, together with advantages and features, by way of example with reference to the drawings.

DETAILED DESCRIPTION OF THE INVENTION

Referring to FIG. **1**A, there is shown, a side elevation view of an automatic or semi-automatic firearm **10** capable of automatic or semiautomatic fire incorporating features in accordance with an exemplary embodiment of the present invention. Although the features of such embodiments will be described with reference to the embodiments shown in the drawings, it should be understood that the described features can be embodied in many alternate forms of embodiments. In addition, any suitable size, shape or type of elements or materials could be used.

Referring now to FIG. **1**A, there is shown a side view of an automatic or semi-automatic firearm **10** incorporating features in accordance with an exemplary embodiment. Referring also to FIG. **1**B, there is a side view of an automatic or semi-automatic firearm **10** incorporating features in accordance with an exemplary embodiment. Firearm **10** may be a modular carbine as a user level, mission configured, light weight modular, multi caliber weapon system. For example, the system may include a selectable upper receiver **33** (i.e. selectable from a group of different types of receivers that are interchangeable) and may be a multi caliber, multi operating system carbine/rifle. The system may be magazine fed and capable of firing in both automatic (e.g. continuous) and semi automatic modes. Firearm or rifle **10** may allow a user to quickly reconfigure the weapon system to meet multiple mission requirements. For example, firearm **10** may be configured for calibers from 5.56 mm up to and including 7.62×51 mm NATO (and even larger if so desired) by changing the upper receiver group effected via a modular swap of the upper receiver. In alternate embodiments, different calibers may be provided or a common buffer system may be provided, or different buffer systems may be provided as will be described in greater detail below. As will be described, the configuration provides that by disengaging takedown and pivot pins (effected for example with simple tools, no tools, armorer or gauges), a user may change from a 5.56 mm close quarters battle (CQB) short barrel configuration to a full length 7.62×51 mm extended range carbine (ERC) or rifle configuration without the need to re-zero or re target optics already mounted on the upper receiver assembly. Here, the weapon system may offer user level modular configuration capability and may reduce critical mission time loss and key technical personnel needs to execute weapon configuration changes. Rifle **10** may have a self contained approach that protects components of the operating system and may provide uninterrupted operability in multiple environments. Rifle **10**, having a common lower receiver **44**, may provide a single serial number weapon system that may be reconfigured into multiple carbine/caliber configurations without the use of special tools (e.g. tools other than what may be available to the user from the firearm itself). The modular capability may also apply to the operating system which may be configured for gas impingement, piston or hybrid gas/piston operating systems. Lower receiver **44** is shown in the exemplary embodiment configured as a 7.62×51 mm lower receiver (e.g. a configuration that accepts magazines for 7.62×51 mm ammunition) as well as magazines for smaller or different caliber ammunition, as will be further described). In other embodiments, any suitable caliber may be provided.

Lower receiver **44** may be forged and may have a polymer A2 style grip and may be compatible with M4/M16 type magazines, trigger mechanisms and upper receiver/barrel assemblies with various barrel lengths, calibers and operating systems. Lower receiver **44** may have an ambidextrous bolt catch, magazine catch and/or selector level, for example, such as disclosed in U.S. patent application Ser. No. 11/351,631 filed Feb. 9, 2006, which is hereby incorporated by reference herein in its entirety. Upper receiver **33** may be forged and may be a modular one piece upper receiver and may have steel inserts in desired wear areas to extend service life. Barrel **36** may be a free floating barrel with different lengths, for example, 13", 16" and 18". Barrel **36** may be suppression capable, for example, utilizing an

SEI Vortex R Compensator. Magazine **48** may be of polymer construction and compatible with M110 sniper weapon systems (SWS) metal magazines. Sight **52** may be an adjustable folding front sight offering mounting of multiple sights and ancillary devices without obstruction of a standard front sight post. Stock **42** may be a collapsible, multiple position EMod or IMod buttstock. Rifle **10** may have a Mil-Spec hard coat anodize finish and may have multiple camouflage colors and patterns.

In the embodiment shown in FIG. **1**A, upper receiver **34** is shown having a 16", 7.62×51 mm barrel and is interchangeable with upper receiver **12** having a 13" CQB 7.62×51 mm barrel. In alternate embodiments, any suitable combination of barrels or calibers may be provided, for example, 308 Win., 7-08 Rem., 243 Win, 22-250 Rem. or otherwise. In the embodiment shown in FIG. **1**B, 7.62×51 mm universal or common lower receiver **44** is shown compatible with interchangeable upper receivers **16**, **18**, **20**, **22**, **33**, **34** where upper receiver **33** may be an ERC 16", 7.62×51 mm upper receiver and barrel assembly and where upper receiver **16** may be a Carbine 14.5", 7.62×51 mm upper receiver and barrel assembly and where upper receiver **18** may be a CQB 10.3", 7.62×51 mm upper receiver and barrel assembly and where upper receiver **20** may be an M4 7.62×51 mm upper receiver and barrel assembly with ARS and where upper receiver **22** may be any suitable Colt M4 7.62×51 mm upper receiver and barrel assembly.

As will be described, in alternate embodiments, upper receiver assemblies **12**, **16**, **18**, **20**, **22**, **33**, **34** may have one or more different calibers and may mate, for example with one or more different adapters (such as adapter **190** shown in FIG. **1**C) that correspond to the different caliber upper receivers (or in alternate embodiments without an adapter as will be further described) to the common lower receiver **44**. As will be described below, with the use of an adapter, for example adapter **190** in FIG. **1**C, lower receiver **44** may be compatible with any suitable caliber upper receiver, for example, 5.56×45 mm NATO upper receiver **170**, **230** or **250**, 6.5 Grendel R, Rem. SPC, 7.62×39 mm, Rem. or otherwise. In the embodiment shown, each non 7.62×51 mm caliber may have a corresponding magazine well adapter, though in some alternate embodiments, a common magazine well adapter may be provided configured to mate more than one caliber magazine to the magazine well of the common lower receiver. As such, modular automatic or semiautomatic rifle **10** has a lower receiver assembly **44** having a fire control assembly **93**. Upper receiver assembly **34** has frame **28** and a bolt carrier assembly configured for firing bullets of a predetermined caliber. Lower receiver assembly **44** is connectable to upper receiver assembly **34** and has a mating interface **70** configured for operably joining lower receiver assembly **44** to upper receiver assembly **34**, and for operably joining the lower receiver assembly **44** to another of the different interchangeable upper receiver assemblies **250** (e.g. upper receiver assembly modules **12**, **16**, **18**, **20**, **22**, **252**, each of which is different from the upper receiver assembly **34**) configured for firing bullets of different predetermined calibers and/or firing characteristics. The other upper receiver assembly **250** has a different frame **252** and different bolt carrier assembly configured for firing bullets of a different predetermined caliber. In the embodiments shown, upper receiver assembly **250** is selectable from different interchangeable upper receiver assemblies, each having a different predetermined characteristic determining a different predetermined caliber of bullets capable of being fired by the rifle. Adapter **190** may be provided connectable to the mating interface **70** and mating lower receiver assembly **44** the other upper receiver assembly **250**.

Below, are specification tables A, B listing features of different exemplary upper receiver assembly modules such as shown in FIGS. **1**A-**1**B, in accordance with an exemplary embodiment.

TABLE A

CM901	Carbine	CQB
Caliber	7.62 × 51 NATO	7.62 × 51 NATO
Dry Weight	9.4 lbs	9.1 lbs
Extended Length	37.5"	34.5"
Collapsed Length	34.25	31.25
Barrel Length	16"	13"
Barrel Type	Forged, H.B.	Forged, H.B.
Bore	Chromed, 4 Grooves, 1-12" twist, RH	Chromed, 4 Grooves, 1-12" twist, RH
Ambidextrous	Yes	Yes
Method of Operation	Gas; Direct System; Locking Bolt	Gas; Direct System; Locking Bolt
Muzzle Velocity	2770 fps	2540 fps
Effective Range	700 m	500 m
Front Sight	Adjustable Folding Front	Adjustable Folding Front
Cyclic Rate of Fire	700-950 rpm	700-1000 rpm

TABLE B

Fire Control	Safe-Semi-Auto	Safe-Semi-Auto
Upper Receiver	Flat-Top, Monolithic Upper Receiver	Flat Top, Monolithic Upper Receiver
Design Maximum Operating Chamber Pressure	70,000 psi max	70,000 psi.max
Accuracy Specification with M118	SUB 2 MOA	SUB 4 MOA
Accuracy Specification with 118LR	SUB 1 MOA	SUB 2.5" MOA

TABLE C

CM901	Carbine	CQB	Commando	ERC
Caliber	5.56 × 45 NATO	5.56 × 45 NATO	5.56 × 45 NATO	5.56 × 45 NATO
Dry Weight	7.5 lbs	7.1 lbs	7.3 lbs	7.7 lbs
Extended Length	35.25"	31"	32.25"	36.75"
Collapsed Length	32"	27.8"	29"	33.5"
Barrel Length	14.5"	10.3"	11.5"	16"
Barrel Type	Broached, H.B.	Broached, H.B.	Broached, H.B.	Forged., H.B.
Bore	Chromed, 6 Grooves, 1-7" twist, RH	Chromed, 6 Grooves, 1-7" twist, RH	Chromed, 6 Grooves, 1-7" twist, RH	Chromed, 6 Grooves, 1-7" twist, RH
Method of Operation	Gas; Direct System; Locking Bolt	Gas; Direct System; Locking Bolt	Gas; Direct System; Locking Bolt	Gas; Direct System; Locking Bolt
Ambidextrous	Yes	Yes	Yes	Yes
Muzzle Velocity with M855	2785 fps	2600 fps	2610 fps	2900 fps
Effective Range	500 m	400 m	400 m	600 m

TABLE C-continued

Front Sight	Adjustable Folding Front	Adjustable Folding	Adjustable Folding Front	Adjustable Folding
Cyclic Rate of Fire	700-950 rpm	700-950 rpm	700-950 rpm	700-950 rpm

TABLE D

Fire Control	Safe-Semi-Auto	Safe-Semi-Auto	Safe-Semi-Auto	Safe-Semi-Auto
Upper Receiver	Flat Top, Monolithic Upper Receiver	Flat Top, Monolithic Upper Receiver	Flat Top, Monolithic Upper Receiver	Flat Top, Monolithic Upper Receiver
Design Maximum Operating Chamber Pressure	66,000 psi max	66,000 psi max	66,000 psi max	65,000 psi max
Accuracy Specification with M855	SUB 4" MOA	SUB 6" MOA	SUB 6" MOA	SUB 4" MOA
Accuracy Specification with Match Grade Ammunition	SUB-1.5" MOA	SUB 4" MOA	SUB 4" MOA	SUB 1" MOA

Table A shows an exemplary specification associated with 7.62×51 mm caliber. Table B shows an exemplary specification associated with 5.56×45 caliber. In alternate embodiments, any suitable caliber may be provided.

Referring now to FIG. **1**D, there is shown a side view of automatic or semi-automatic firearm **10** incorporating features in accordance with an exemplary embodiment. Referring also to FIG. **2**, there is shown an exploded isometric view of the firearm shown in FIG. **1**D. Referring also to FIG. **3**, there is shown an exploded isometric view of the firearm shown in FIG. **1**D. Firearm **10** may be indirect gas operated, like examples, such as the M-4 or M-16 firearms available from Colt Defense, LLC., similar commercial variants thereof and may have features as disclosed in U.S. patent application Ser. No. 11/231,063 filed Sep. 19, 2005, U.S. application Ser. No. 11/352,036 filed Feb. 9, 2006 or U.S. Patent Application No. 60/772,494 filed Feb. 9, 2006 or U.S. patent application Ser. No. 11/154,738 filed Jun. 16, 2005 or U.S. patent application Ser. No. 11/113,525 filed Apr. 25, 2005 all of which are hereby incorporated herein by reference in their entirety. Firearm **10** is illustrated as generally having a black rifle type configuration, the black rifle type configuration being the family of rifles developed by Eugene Stoner, for example, such as an M4 or M16 automatic firearm configuration. However, the features of the disclosed embodiments, as will be described below, are equally applicable to any desired type of automatic or semi-automatic firearm.

Firearm **10** may have features such as disclosed in U.S. patent application Ser. No. 11/672,189 filed Feb. 7, 2007, or U.S. patent application Ser. No. 11/869,676 filed Oct. 9, 2007, or U.S. patent application Ser. No. 11/339,187 filed Jan. 25, 2006, all of which are hereby incorporated by reference herein in their entirety. Firearm **10** may have operational features such as disclosed in U.S. Pat. Nos. 5,726,377, 5,760,328, 4,658,702, 4,433,610, U.S. Non Provisional patent application Ser. No. 10/836,443 filed Apr. 30, 2004, and U.S. Provisional Patent Application 60/564,895 filed Apr. 23, 2004, all of which are hereby incorporated by reference herein in their entirety. The firearm **10** and its sections described in greater detail below is merely exemplary. In alternate embodiments the firearm **10** may have other sections, portions or systems. As noted before, firearm **10** may have an upper receiver section **34** where upper receiver section **34** is shown as a 7.62 mm NATO upper receiver that may be of unitary construction with integral hand guard. In alternate embodiments, different (i.e. a one-piece member) caliber may be used and different removable hand guards may be used. Firearm **10** may have a barrel **36**, direct/indirect or hybrid indirect gas operating system **38**, and hand guard portion **40**. In alternate embodiments, the firearm may have an indirect gas operating system or gas tube operating system. Further, in alternate embodiments, the firearm may have neither a piston nor gas operating system and may rely on recoil action to cycle the firearm, for example, in semi-automatic mode. Here, the gas operated linkage actuating the bolt carriage in the upper receiver may be replaced by a gas tube. Operating system **38** may have operational features such as disclosed in U.S. patent application Ser. No. 12/557,815 filed Sep. 11, 2009 or U.S. patent application Ser. No. 12/559,047 filed Sep. 14, 2009, all of which are hereby incorporated by reference herein in their entirety. Hand guard section **40** may have features such as disclosed in U.S. Pat. Nos. 4,663,875 and 4,536,982, or such as disclosed in U.S. patent application Ser. No. 12/341,970 filed Dec. 22, 2008 or U.S. patent application Ser. No. 12/100,268 filed Apr. 9, 2008, all of which are hereby incorporated by reference herein in their entirety. Hand guard section **40** of upper receiver section **34** may be configured to support such rails as a "Piccatiny Rail" configuration as described in Military Standard 1913, which is hereby incorporated by reference herein in its entirety. The rails may be made from any suitable material such as hard coat anodized aluminum as an example. Rear sight assembly **50** is provided and mounted to upper receiver section **34**. Firearm **10** may incorporate stock **42**, lower receiver section **44**, magazine well **46**, clip or magazine **48** and rear and front sights **50**, **52**.

In the embodiment shown in FIGS. **2-3**, lower receiver **44** is a common lower receiver (for example capable of mating with either a 7.62 mm NATO compatible upper receiver, and a 5.56 NATO type receiver and other upper receivers as previously described). For example, in the embodiment shown, a front portion **90** (see also FIG. **10**B) of lower receiver **44** is NATO 7.62 mm compatible, for example having magazine well **46** that accepts NATO 7.62 mm magazine **48** (as well as magazines for smaller caliber rounds as will be further described), and a rear portion **92** of lower receiver **44**, having a configuration that for purposes of description will be referred to as NATO 5.56 mm compatible (e.g. conforming to parameters and features consistent with NATO 5.56 mm Black Rifle lower receiver) as will be described in greater detail below. As such, front portion **90** has coupling pin hole **70** (see FIG. **2**) located for coupling to a 7.62 mm NATO type upper receiver and with magazine well **46** sized to receive NATO 7.62 mm magazine **48**. The arrangement of the coupling hole **70** is exemplary and in alternate embodiments any suitable configuration may be used. Lower receiver rear portion **92** being NATO 5.56 mm compatible has fire control assembly **93** having trigger, hammer, fire selector that may have features substantially similar to a NATO 5.56 mm lower receiver. In alternate embodiments, other suitable rear portions may be provided with features consistent with other calibers. In the exemplary embodiment and as will be described in greater detail below, firearm **10** is modular from a first configuration such as for the NATO 7.62 mm to another configuration, such as a small

caliber ammunition including the NATO 5.56 mm for example, by decoupling the upper receiver **34** from the lower receiver **44**. An interface adapter (e.g. adapter **190**, see FIG. **1**C, FIG. **17**A-**17**E) is first mated to the upper receiver such as a pin through hole **196** (FIG. **17**D). The combined upper receiver/adapter assembly is coupled to the lower receiver by sliding the adapter through the lower receiver and inserting a pin into the lower receiver and adapter, such as through holes **70**/**194** for example. The rear portion of the upper receiver may similarly be coupled to the lower receiver by a pin, such as through holes **70**/**72** for example. Once the upper receiver, adapter and lower receiver are coupled, the firearm **10** is configured for firing a different round than the first upper. In accordance with one exemplary embodiment, the first main spring and the first buffer (configured for use with a first bolt carrier such as capable of interfacing to the 7.62 mm NATO round), may be replaced with a second main spring and second buffer (configured for use with a second bolt carrier capable of interfacing to the 5.56 mm NATO round) as will be described below, though in other exemplary embodiments, the lower receiver extension **114** (see FIG. **4**), may house a common spring/buffer system as will also be described further below. Although, in the embodiment shown firearm **10** is modular or otherwise has a modular selectable configuration from for example, NATO 7.62 mm to NATO 5.56 mm; in alternate embodiments, any suitable combinations of bullet calibers may be provided or more calibers may be provided.

In one embodiment, the lower receiver **44** has a planar portion **96** that is thicker than the surrounding portions. The planar portion **96** includes a pair of openings sized to receive pins **98**. The pins **98** support and provide a pivot for the trigger **104** and hammer **106**. The thickening of the planar portion **96** reduces the potential for elongation of the holes that support the pins **98** due to extensive or long term use. It should be appreciated that this increases the usable life of the lower receiver **44**.

Stock **42** may have features such as disclosed in U.S. patent application Ser. No. 12/246,542 filed Oct. 6, 2008 or U.S. patent application Ser. No. 11/869,679 filed Oct. 9, 2007, all of which are hereby incorporated by reference herein in their entirety. Upper receiver **34** having barrel **36**, lower receiver **44** and magazine well **46** may be modular and configurable such that firearm **10** comprises a modular rifle design. Further, the hand guard, and accessory mounting rails thereon, may be integral with the upper receiver and the integral upper receiver, hand guard and mounting rails may be of unitary construction. In other embodiments, the upper receiver and hand guard may be separate. The pins **68** are used to couple upper receiver **34** to lower receiver **44** where lower receiver has holes **70** that accept bored lugs **72** of the upper receiver **34**. Lugs **72** have outer surfaces **72'** that mate with inner surfaces **70'** of receiving portion **71** of lower receiver **44** that accepts lugs **72**. In this manner, lugs **72** are captured and retained within receiving portion **71** of lower receiver **44**. In one embodiment, the lug **72** of a larger caliber upper receiver may be longer than the lug **72** of a lower caliber upper receiver. This may provide advantages allowing interchangeability of existing legacy upper receivers, such as the upper receiver sized for the 5.56 mm NATO ammunition for example, with larger caliber ammunition such as an upper receiver sized for 7.62 mm NATO ammunition for example.

The coupling interface in the exemplary embodiments enables relative movement between upper and lower receiver assembly, such as by rotation about pin **68**, to access the interior of the upper and lower receivers and allow removal or access to the bolt carrier assembly (not shown) without entirely decoupling or separating the upper and lower receiver assemblies, and without other disassembly of the upper and lower receiver assemblies than for example, disengagement of rear coupling pin **68**. Although lower receiver **44** is coupled to upper receiver **34** using lugs and lug receiving portions with pins, in alternate embodiments, any suitable fastening and/or locating method may be used, for example, the lugs may be on the lower receiver and the receiving portions on the upper receiver on one or both coupling locations. By way of further example, any suitable locating feature combined with a fastening feature or fastener may be provided that may or may not require tools for assembly and disassembly and that may or may not require removal of a pin or fastener, such as where the upper receiver is mated with the lower receiver by a latching method. By way of further example, the fastening and locating feature at the forward portion of the lower receiver to the upper receiver may be different than the fastening and locating feature at the rear portion of the lower receiver to the upper receiver. In alternate embodiments, a single fastening and locating feature or more fastening and locating features may be provided to couple the lower receiver to the upper receiver. In alternate embodiments, separate locating feature(s) and fastening feature(s) may be provided. Further and similarly with respect to adapter(s) used to couple lower receiver **44** to different upper receiver(s) that may have different caliber(s) or features, any suitable method of fastening and locating features may be provided. Bolt catch release lever **80** is provided to return the bolt to the battery position upon firing the last round in magazine **48**. Magazine release button **82** and magazine release lever **84** are provided to release magazine **48** from lower receiver **44**. As will be described below, magazine release lever **84** retains magazine **48** upon complete insertion into well **46**.

Referring now to FIG. **4**, there is shown an exploded isometric view of the common lower receiver **44** of the firearm **10** shown in FIG. **1**D. As noted before the lower receiver **44** in the exemplary embodiment is capable of interfacing with different interchangeable upper receivers, each capable of firing different NATO chamber rounds. Hence, the lower receiver **44** may be referred to as a common lower receiver for the different interchangeable upper receivers. Referring also to FIG. **5**, there is shown an exploded isometric view of the lower receiver of the firearm shown in FIG. **1**D. In the exemplary embodiment, lower receiver section **44**, may be an assembly including receiver extensions and stock **42**, magazine well **46** and clip or magazine **48**. In the embodiment shown, lower receiver **44** is shown having front portion **90** having magazine well **46** configured so that it is capable of accepting magazines for different rounds such that NATO 7.62 mm magazine **48** and the NATO 5.56 mm magazine (see also FIGS. **19**, **20**). The portion **92** of the lower receiver, to the rear of front portion **90** includes the trigger and fire control group and the receiver extension.

Magazine well **46** may have interlock features, for example rails or detents that may be both exterior and interior to couple with mating features on the magazine **48** or the interface adapter as will be described below to fix the adapter to the upper receiver. Front portion **90** of lower receiver **44** has coupling pin hole **70** located for coupling to an upper receiver **34** (e.g. a 7.62 mm NATO compatible upper receiver) and with magazine well **46** sized to receive conventional for example NATO 7.62 mm magazine **48**. Pins **68** are shown that couple upper receiver **34** to lower receiver **44** where lower receiver has holes **70** that accept

bored lugs **72** of the upper receiver **34**. Bolt catch release lever **80** is provided to return the bolt to the battery position upon firing the last round in magazine **48**. Magazine release button **82** and magazine release lever **84** are provided to release magazine **48** from lower receiver **44**. Magazine release lever **84** retains magazine **48** where projection **100** of release **84** engages tab **102** of magazine **48** upon complete insertion into well **46**. Pressing release button **82** disengages projection **100** from tab **102** allowing the magazine **48** to be ejected.

As noted before, rear portion **92** of lower receiver has features consistent for example with a 5.56 mm NATO lower receiver **44** including trigger **104**, hammer **106**, fire control selector **108**, and auto sear **110**. Lower receiver may have a separable or integral grip **43** and features for mounting stock. The grip **43** may have a curved portion **45** and a surface **47** adjacent the stock **42**. The curved portion **45** and surface **47** are sized to receive the user's hand. In one embodiment, the surface **47** has been lowered to improve the alignment of the user's index finger with the trigger. This improves the user's ability to handle the recoil of the firearm during use. The lowering of surface **47** also moves the users hand away from the fire control selector **108**.

As may be realized, in other embodiments, the upper receiver may be coupled conventionally to the lower receiver. The firearm **10** also has an action spring and buffer assembly **112** for motivating the stroke of the bolt carrier during its cycle. The action spring and buffer assembly **112** of firearm **10** are housed within the lower receiver rear extension **114**. In the exemplary embodiment shown, the receiver extension may be positioned and configured consistent with interface to a 5.56 mm NATO compatible upper receiver and bolt carrier assembly, though in the exemplary embodiment the receiver extension **114** and the entire lower receiver is further capable of interfacing with an upper receiver and bolt carrier compatible for example with the 7.62 mm NATO round. In the exemplary embodiment buffer **116** and action spring **118** may have different length, mass and stiffness such as for example, 7.62 mm compatibility as opposed to a 5.56 mm spring and buffer as will be described below. As described, in the embodiment shown, lower receiver **44** is shown as a 7.62×51 mm and 5.56 mm common lower receiver where a front portion **90** of lower receiver **44** is NATO 7.62 mm compatible having magazine well **46** that accepts NATO 7.62 mm magazine **48** and where a rear portion **92** of lower receiver **44** is NATO 5.56 mm compatible.

Referring now to FIGS. **6**A and **6**B, there are respectively shown rear and right side views of the upper receiver **34** of the firearm shown in FIG. **1**D configured for example for compatibility with the 7.62 mm NATO round. Referring also to FIGS. **7** and **8**, there are exploded isometric views of the upper receiver **34** of the firearm **10** shown in FIG. **1**D. Upper receiver section generally has barrel **36**, direct or indirect gas operating system **38**, hand guard **40**, rear and front sights **50**, **52**, ejection port cover **120** attachment and bolt carrier assembly **124**. The barrel and/or the bolt/bolt carrier may be coupled to upper receiver section using conventional splined and/or threaded/pinned locking techniques or otherwise. Hand guard **40** may have features such as disclosed in U.S. Pat. Nos. 4,663,875 and 4,536,982, both of which are hereby incorporated by reference herein in their entirety. Hand guard may have features for mounting additional devices on one or more rails (e.g. "Piccatiny Rail" or other suitable configuration) for attachment of any suitable peripheral devices. In the embodiment shown, rifle **10** has receiver having an integral hand guard portion with barrel removably connected to receiver. In alternate embodiments the hand guard portion may be removable from the upper receiver. Hand guard **40** is shown having a removable bottom portion with integral lower rail for different mounting options that may be provided. In this embodiment the rail may be located at the six (6) o'clock position relative to the barrel axis, though in alternate embodiments the removable rail may be located in any other desired location. The bottom portion may be removable to install other accessories with a differently configured bottom portion, such a grenade launcher as an example. The removable bottom portion having an integral rail may have features or be mounted using a keyed/key way system or tongue and groove system or other suitable system, such as described in U.S. Patent Application No. 60/772,494, filed Feb. 9, 2006 and U.S. patent application Ser. No. 12/100,268, filed Apr. 9, 2008, all of which hereby incorporated by reference in their entirety. Here, the upper receiver **34** is shown as unitary with integral hand guard **40**, and has a bolt carrier assembly **124** and bolt therein, that in the exemplary embodiment may be configured for operation with the 7.62 mm NATO round. In contrast to a conventional bolt carrier assembly, bolt carrier assembly **124** is configured to interface and operate with the lower receiver **44** (e.g. configured as previously described consistent for interface with the 5.56 mm NATO bolt carrier assembly) as will be described below.

Referring now also to FIGS. **9**A and **9**B, there are respectively shown side and rear views of the bolt carrier **124** for the upper receiver **34** of the firearm shown in FIG. **1**D. In the exemplary embodiment the bolt carrier rear **130** is shown configured for interface with the 5.56 mm receiver extension tube **114** coupled to lower receiver **44** and buffer **116** and having a similar diameter with respect to a 5.56 mm compatible buffer. As may be realized, the exterior of the rear portion of the bolt carrier frame is sized and shaped to conform to the receiver extension tube **114**. In the exemplary embodiment, a smaller diameter bolt carrier rear and shorter length (relative to a conventional 7.62 mm NATO bolt carrier) provide compatibility with the rear portion **92** of lower receiver **44**.

Additionally, the center line **136** and reaction axis of rear portion **130** of bolt carrier is offset from 7.62 mm bolt **134** and the center line of front portion **134** of bolt carrier **124** where the rear portion **130** of bolt carrier **124** is eccentric with respect to bolt **132** and front portion **134** of bolt carrier **124**. Here, the rear bolt center line **136** is lower (towards the lower receiver) relative to a reference datum bolt centerline as compared to a conventional 7.62 mm bolt/bolt carrier. As may be realized from FIGS. **9**A-**9**B, the guide surfaces on the bolt carrier guiding the reciprocating action of the bolt carrier are offset relative to each other between the front **134** and rear portion **130** of the carrier **124**. In the exemplary embodiment, the bolt centerline **138** may be offset towards the lower receiver a desired amount compared to a conventional 7.62 mm NATO upper receiver. As may be realized, features of the upper receiver **38** located from the bolt centerline **138** may be located commensurate with the offset.

Referring now to FIGS. **10**A, **10**B, **10**C, **10**D and **10**E, there are respectively shown rear, top, side, bottom and front views of the lower receiver housing of the firearm shown in FIG. **1**D. Referring also to FIGS. **11**A-**11**D, there are shown isometric views of the lower receiver housing of the firearm shown in FIG. **1**D. Lower receiver section **44** has housing **150** with magazine well **46**. Well **46** has slot **152** that is shown allowing tab **102** (see FIG. **4**) of magazine **48** to not interfere when magazine **48** is inserted into well **46**. In the exemplary embodiment, the lower receiver housing **150** is

shown as having what may be referred to as a hybrid configuration, such as a 7.62×51 mm portion and a portion in a 5.56 mm portion in a lower receiver common housing. As noted before, a front portion **90** of lower receiver **44** may be NATO 7.62 mm compatible having magazine well **46** that accepts up to a NATO 7.62 mm magazine **48** and other smaller caliber magazines, including without limitation one non-limiting embodiment of a 5.56 mm NATO magazine **200** (see FIGS. **19-20**) for example. In the exemplary embodiment shown, the magazine may be of one piece unitary construction with the magazine well portion integral to the lower receiver housing. In alternate embodiments, the magazine well portion may be removably mounted or joined to the lower receiver, such as a modular attachment fastened without separate detachable fasteners, for example as shown and described in U.S. Pat. No. 7,131,228, issued Nov. 7, 2006, and incorporated by references herein in its entirety. Magazine well **46** may have interlock features, for example rails **153** or detents **155** that may be both exterior and interior to couple with mating features on the magazine **48** or the interface adapter **190** (see also FIG. **17**) as will be described below to fix the adapter to the lower receiver. Front portion **90** of lower receiver **44** has coupling pin hole **70** located for coupling to a 7.62 mm lower receiver and with magazine well **46** sized to receive conventional NATO 7.62 mm magazine **48**. Pins couple upper receiver **34** to lower receiver **44** where lower receiver has holes **70** that accept bored lugs **72** of the upper receiver **34**.

Referring now to FIG. **12**A, there is shown an isometric view of a first action spring **118** sized and shaped to be housed in the rear receiver extension **114** of the lower receiver. The action spring **118** is further sized and shaped to provide the desired dynamic interface for 7.62 mm bolt carrier and may be referred to for convenience as the 7.62 mm spring. The 7.62 mm spring **118** and buffer **116** are compatible with the 5.56 mm portion of lower receiver **44** and rear extension tube **114**. Here, buffer **116** and action spring **118** have a different length, mass and stiffness for 7.62 mm as compared to the 5.56 mm spring and buffer shown in FIG. **12**B.

Referring now to FIG. **12**B, there is shown an isometric view of a 5.56 mm spring **160**. The 5.56 mm spring **160** and buffer **162** are conventional and compatible with the 5.56 mm portion of lower receiver **44** and rear extension tube **114**. Here, buffer **116** and action spring **118** have a different length, mass and stiffness for conventional 5.56 mm as compared to the 7.62 mm spring and buffer shown in FIG. **12**A.

Referring now to FIGS. **13**A, **13**B, **13**C, **13**D and **13**E, there are respectively shown rear, top, side, bottom and front views of an upper receiver housing **170**, for example for upper receivers **20**, **252** (see also FIG. **1**B) such as may be compatible with NATO 5.56 mm rounds. Referring also to FIGS. **14**A-**14**D, there are shown isometric views of the upper receiver housing **170**. In the exemplary embodiment shown, the upper receiver **170** may have a separate hand guard, though in alternate embodiments the upper receiver may be of unitary construction, including an integral hand guard similar to upper receiver **34** (shown in FIGS. **4-8**). Upper receiver housing **170** is shown as features substantially similar to a conventional, 5.56 mm upper receiver housing for a black rifle type firearm. Lug **172** has a bore that interfaces with the rear hole **70** in lower receiver **44** and engages pin **68** to couple the rear portion of housing **170** to lower receiver **44**. In the exemplary embodiment shown, the lugs **172**, **174** are positioned (for example relative to the barrel mount center line and barrel chamber reference datum (not shown)) consistent with the configuration of a NATO 5.56 mm upper receiver. As will be described below, lug **174** of upper receiver housing **170** has a bore that interfaces with a hole in the 7.62 mm to 5.56 mm magazine adapter and engages pin **68** to couple the front portion of housing **170** to the adapter. The adapter further has a lug having a bore that engages a third pin **68** with the front bore **70** of lower receiver **44**. As such the front portion of 5.56 mm upper receiver housing **170** is coupled to the common lower receiver **44**. The upper receiver housing may interface with a separate hand guard that may be a split guard having upper and lower sections that may be removable. In alternate embodiments, the guard may include fewer or more sections (e.g. the hand guard may have, three four or more guard sections extending along the barrel generally similar to the upper and lower hand guards). An upper hand guard may be provided unitary with integral upper rail of receiver the upper rail of the hand guard may be aligned with the rail integrally formed on the upper receiver and extends in front of upper rail when upper hand guard is mounted. A suitable hand guard is disclosed U.S. patent application Ser. No. 12/100,268, filed Apr. 9, 2008, which is hereby incorporated by reference in its entirety.

Referring now to FIGS. **15**A, **15**B, **15**C, **15**D and **15**E, there are respectively shown rear, top, side, bottom and front views of a conventional 5.56 mm bolt carrier **180**. Referring also to FIGS. **16**A-**16**D, there are shown isometric views of the 5.56 mm bolt carrier **180**.

Referring now to FIGS. **17**A, **17**B, **17**C, **17**D, **17**E and **17**F, there are respectively shown left side, rear, top, right side, bottom and front views of an interface adapter **190**. Referring also to FIGS. **17**A-**18**D, there are shown isometric views of the interface adapter **190**. As may be realized, in the exemplary embodiment, the interface adapter may not be installed when interfacing of the lower receiver with upper receiver **34** (e.g. 7.62 mm NATO), but may be installed when interfacing the lower receiver with receiver **170** (e.g. 5.56 mm NATO) such that the lower receiver may receive both 7.62 mm NATO and 5.56 mm NATO magazines. In the exemplary embodiment, the interface adapter is removed from the lower receiver for coupling to the upper receiver **34**, and is mated to the lower receiver for coupling to the upper receiver **170**. Adapter **190** may be removably mounted into magazine well **46** and can be made of any suitable material such as metal, plastic, ceramic or otherwise. In the exemplary embodiment, adapter **190** couples to the 7.62 mm coupling pin **68** of lower receiver **44** via first coupling pin hole **194** and forming a lug with mating surfaces **194'** that mate with surfaces **70'** of receiving portion **71** (see also FIGS. **2** and **11**A-**11**D). Hole **194** is positionally located to mate to lower receiver **44** front coupling pin **68** and hole **70** in the forward portion of lower receiver **44**. In addition, adapter **190** may be positionally fixed by detention features **193**, **195** engagement with complementing feature **153**, **155** (see FIGS. **11**A-**11**B) of lower receiver **44**. Adapter **190** has a second coupling pin hole **196** and forms a receiving portion **197** with mating surfaces **197'** that receives forward lug **174** of upper receiver **170** where mating surfaces **197'** mate with surfaces **174'** of lug **174** and that enables coupling of lower receiver **44** to 5.56 mm upper receiver housing **170**. Here, lug **174** of upper receiver housing **170** has a bore that interfaces with hole **196** in the 7.62 mm to 5.56 mm magazine adapter **190** and engages pin **68** to couple the front portion of housing **170** to the adapter **190** where the pin in combination with the opposing mating surfaces couples adapter **190** to upper receiver **170**. As covered previously, adapter **190** further has a lug **194** having a bore that engages

a third pin **68** with the front bore **70** of lower receiver **44**. As described the front portion of 5.56 mm upper receiver housing **170** may be coupled to the lower receiver **44**.

The outer envelope of adapter **190** is such that well **46** accepts adapter **190** similar to the magazine **48** but inserted through the top of lower receiver **44**. Slot **192** allows a tab of a 5.56 mm magazine to pass without interference. The interior portion of adapter **190** is configured to accept a 5.56 mm magazine positionally in well **46** such that 5.56 mm cartridges may be supplied to a 5.56 mm compatible upper receiver mounted on lower receiver **44**.

Referring now to FIGS. **19**A, **19**B, **19**C, **19**D, **19**E, and **19**F, there are show respectively rear, top, right side, bottom, front, and left side views of a 5.56 mm magazine. Referring also to FIGS. **18**A and **18**B, there are shown isometric views of the 5.56 mm magazine. 5.56 mm magazine **200** is shown having tab **202**. Similar to the retention and release of magazine **48**, magazine release lever **84** retains magazine **200** where projection **100** of release **84** engages tab **202** of magazine **200** upon complete insertion into well **46**. Pressing release button **82** disengages projection **100** from tab **202** allowing the magazine **48** or **200** to be ejected. Further, slot **192** of adapter **190** allows tab **202** of 5.56 mm magazine **200** to pass without interference during insertion and removal from well **46** when adapter **190** is installed.

Referring now to FIG. **21**A, there is shown an end view of a 5.56 mm upper receiver **230**. Referring also to FIG. **21**B, there is shown a side view of a 5.56 mm upper receiver **230**. In the exemplary embodiment shown, the upper receiver **230** has frame **232** where the upper receiver is shown of one piece unitary construction, including an integral hand guard upper receiver housing **230** is shown as features substantially similar to 5.56 mm upper receiver housing for a black rifle type firearm such as the upper receiver shown and described in U.S. patent application Ser. No. 11/352,036, previously incorporated by reference herein, or other 5.56 mm compatible upper receiver. Lug **234** has a bore that interfaces with the rear hole **70** in lower receiver **44** and engages pin **68** to couple the rear portion of housing **230** to lower receiver **44**. Lug **236** of upper receiver housing **230** has a bore that interfaces with hole **196** in the 7.62 mm to 5.56 mm magazine adapter **190** and engages pin **68** to couple the front portion of housing **230** to the adapter **190**. Adapter **190** further has lug **194** having a bore that engages a third pin **68** with the front bore **70** of lower receiver **44**. As such the front portion of 5.56 upper receiver housing **230** is coupled to the lower receiver **44**.

Referring now to FIG. **22**A, there is shown an end view of a 5.56 mm upper receiver **250**. Referring also to FIG. **22**A, there is shown a side view of a 5.56 mm upper receiver **250**. In the exemplary embodiment shown, the upper receiver **250** has frame **252** where the upper receiver is shown including a separable hand guard **254**. Upper receiver housing **250** is shown as features substantially similar to a 5.56 mm compatible upper receiver housing for a black rifle type firearm. Lug **256** has a bore that interfaces with the rear hole **70** in lower receiver **44** and engages pin **68** to couple the rear portion of housing **250** to lower receiver **44**. Lug **258** of upper receiver housing **250** has a bore that interfaces with hole **196** in the 7.62 mm to 5.56 mm magazine adapter **190** and engages a pin in hole **196** to couple the front portion of housing **250** to the adapter **190**. Adapter **190** further has lug **194** having a bore that engages a third pin **68** with the front bore **70** of lower receiver **44**. As such the front portion of 5.56 mm upper receiver housing **250** is coupled to the lower receiver **44**.

Referring now to FIG. **23**, there is shown a side view of a 5.56 mm upper receiver **270** in accordance with another exemplary embodiment. Whereas exemplary upper receivers **230**, **250** described previously may interface with separate adapter **190** to couple to common lower receiver **44** upper receiver **270** in the exemplary embodiment shown in FIG. **23**, may couple with lower receiver **44** without separate adapter **190**. In the embodiment shown, 5.56 mm upper receiver **270** is shown with an integral adapter portion **272** that may be an assembly or may be of unitary construction. In an assembly, the portion **272** may be mounted or assembled to the frame of the upper receiver using integral fasteners such as keys or "snap on" fastening systems (e.g. detents and receptacles) and no separate removable fasteners). In the exemplary embodiment shown, the upper receiver **270** has frame **274** where the upper receiver is shown of unitary construction, including an integral hand guard. Upper receiver housing **270** is shown as features substantially similar to a 5.56 mm compatible upper receiver housing for a black rifle type firearm but with integral adapter portion **272**. Lug **276** has a bore that interfaces with the rear hole **70** in lower receiver **44** and engages pin **68** to couple the rear portion of housing **270** to lower receiver **44**. Lug **280** of upper receiver housing **270** has a bore that interfaces with the front bore **70** of lower receiver **44**. As such the front portion of 5.56 mm upper receiver housing **270** is coupled to the lower receiver **44**.

Referring now to FIG. **24**, there is shown an isometric view of an exemplary upper receiver **290** where upper receiver **290** may be of any suitable caliber. An insert or skid plate **294** may be installed and may be used with any caliber upper receiver. Skid plate **294** may be of steel or any suitable material and may be inserted, for example, within an aluminum upper receiver housing. Skid plate **294** may function as a guide and may be provided for ease of manufacture. Referring also to FIG. **25**, there is shown an isometric view of skid plate **294**. Skid plate **294** may have thickness **296**, for example, 0.030" thick and having a center rib **298**. Here, rib **298** may be provided to interface with a mating groove in the skid surface on the bottom of the rear end of a bolt carrier (i.e. for example FIG. **15**D)). Alternately, rib **298** may not be provided, for example, with a bolt carrier having a rounded bottom at the rear. The thickness **296** of skid plate **294** is mounted within recess **300** of upper receiver **290**. Skid plate **294** further has lugs **302**, **304** that are retained on opposing portions of upper receiver lug **306** preventing skid plate **294** from moving. Alternately, skids on the bolt carrier may be removed and the skid plate forms a skid surface positioned to reduce or eliminate the possibility of the bolt carrier binding in the buffer tube (receiver extension) caused by misalignment of the buffer tube and the upper receiver. In the embodiment shown, skid plate **294** is shown positioned in upper receiver **290** to engage the bottom rear of the bolt carrier where skid plate **294** corrects any carrier tilt as the carrier moves rearward during action operation. Thus, the skids present on conventional bolt carriers are removed and the skid plate elevates the bolt carrier riding thereon and reduces or eliminates the risk of the carrier binding in the buffer tube (receiver extension) caused by misalignment of the buffer tube and the upper receiver. Such misalignment may be caused by tolerance stackup between the upper receiver, lower receiver, lower receiver threads, buffer tube threads, and the buffer bore.

Referring now to FIG. **26**, there is shown on isometric view of an upper receiver **310** showing an alternate embodiment skid plate **312**. Referring also to FIG. **27**, there is shown an isometric view of skid plate **312**. Skid plate **312**

may have thickness **314**, for example, 0.030" thick or otherwise. The thickness **296** of skid plate **294** is mounted on inner surface **316** of upper receiver **310**. Skid plate further has lugs **318**, **320** that are retained on portions of upper receiver lug **322** preventing skid plate **310** from moving.

Referring now to FIG. **28**, there is shown a section view of a firearm **350** having a common buffer **352**. Accordingly, in the exemplary embodiment different interchangeable upper receiver assembly modules may be swapped onto the common lower receiver (similar to lower receiver **44**) as previously described, and without changing buffer components, such as springs or otherwise. Referring now to FIG. **29**, there is shown an isometric view of buffer detent **354** in accordance with an exemplary embodiment. Referring also to FIG. **30**, there is shown a section view of a firearm **350** with the upper and lower receivers in a closed position. Referring also to FIG. **31**, there is shown a section view of firearm **350** with the rifle partially opened. Except as otherwise described below the upper and lower receivers of firearm **350** are substantially similar to the upper and lower receivers of firearm **10**.

A retractable/automatic buffer detent **354** is provided and held down by upper receiver **356** rear lug **358** when the upper receiver is in the closed position. Removing takedown pin **360** by pushing takedown pin **360** out allows detent **354** to open the rifle a small amount so that retracting bolt carrier assembly **362** will automatically open the rifle when buffer **364** is behind detent **354** (See FIG. **31**) and lined up with the rear of the rifle. With detent **354** pushing on the upper receiver **356** when upper receiver **356** is pinned to lower receiver **366**, force is applied from shoulder surface **392** of detent **354** to rear lug **358** removing any play in the pin holes in the lower and upper receiver for take down pin **360** (See FIG. **30**). With a shortened bolt carrier **362** a distance **370** that the buffer needs to be held back in order to open receiver **356** is provided by detent **354** retaining buffer **364**. Buffer detent retaining pin **372** is provided in mating slot **374** of detent **354** to retain detent **354** within lower receiver **366**. Buffer detent spring **376** is provided within bore **378** of lower receiver **366** and inside of post **380** of detent **354** and when compressed presses against shoulder **382** of detent **354** to provide the upward force. In this manner, a common buffer system **352** having a common spring **386** and buffer **364** is located on a common lower receiver extension **388** for more than one upper receiver.

Common buffer system **352** enables a "conformal" buffer system and may extend the buffer **362** and spring **386** beyond the front face of the extension tube and rear end of the upper receiver to engage the bolt carrier end inside the upper receiver during operation. By way of example, a 7.62 mm (and other calibers 5.56 mm) bolt carrier may be shortened so that stroke is accommodated, at least in part within the upper receiver. For example, the length of a 7.62 mm bolt carrier may be shortened, to be generally similar to the length of a 5.56 mm bolt carrier where the bolt carrier length may be shortened by reducing the length of the bolt carrier rear portion (similar to rear portion **130** in FIG. **9**A). In alternate embodiments, any suitable caliber or bolt carrier may be provided where the length of the bolt carriers may be varied as desired where conformance engagement by the buffer system may allow the bolt carrier length (including 5.56 mm carrier) to vary as desired. Further, conformance engagement may allow a common buffer and main spring to be used with more than one of bolt carrier type and for example with all bolt carrier types.

In the embodiment shown, an actuable buffer retainer and detent system is incorporated to replace the conventional static buffer retainer and detent of a conventional black rifle configuration where the actuable buffer detent is automatic and is spring loaded. When detent **354** is in the deployed (extended) position (see FIG. **3**D), detent **354** retains buffer system **352** substantially flush at the extension tube rear end upper receiver interface, allowing upper receiver **356** to be removed and disengaged from lower receiver **366**. In the closed position (see FIG. **30**), detent **354** allows buffer system **352** to conformably engage bolt carrier **362**, for example, to extend outside of extension tube into or to maintain contact with bolt carrier **362**, for example at portion **390**. Buffer detent **354** is shown positioned between deployed and retracted positions by upper receiver **356**. In the embodiment shown, contact surface **394** on rear pin lug **358** engages detent **354** where detent **354** is automatically closed when closing upper receiver **356** and automatically released when opening upper receiver **356**. Partial release may occur to facilitate retraction of buffer **364** via cycling of bolt carrier **362** with charging handle, followed by full release to the deployed position when upper receiver **356** is opened. Bias of spring loaded detent **354** against upper receiver **356** may eliminate any undesired play and associated noises between the upper and lower receiver. Further, upon removal of takedown pin **360**, detent **354** may automatically commence opening upper receiver **356** and retraction of bolt **362** via the charging handle will release buffer detent **354**. In alternate embodiments, any suitable configuration may be used for the detent camming and ramped surface **396** may be provided on a front portion of detent **354** that may aid retraction of buffer **364** with detent **354** in a partial deployed position.

In one embodiment, the upper receiver **404** (FIG. **32-33**) is sized to operate using 7.62 mm NATO cartridges, while the upper receiver **406** (FIG. **34-35**) is sized to operate using 5.56 mm cartridges. Each upper receiver includes a bolt carrier assembly **408**, **410** which are similar to the bolt carrier assemblies described above. The bolt carrier assemblies **408**, **410** cooperates with ammunition cartridges (not shown) received via a magazine to properly chamber and remove the ammunition cartridge during operation. The bolt carrier assemblies **408**, **410** cooperate with a common buffer assembly **412** (FIG. **38**) that assists in absorbing the energy of the bolt carrier assemblies **408**, **410** after the ammunition cartridge is discharged and returns the bolt carrier assemblies **408**, **410** to chamber the next ammunition cartridge.

The buffer assembly **412** includes an action spring **420** and a buffer member **422**. The buffer assembly **412** is at least partially disposed within an opening **424** of a receiver extension **426**. The buffer member **422** has a first portion **428** that is sized to fit slidably within the opening **424**. The first portion **428** includes a face **432** that engages an end **434** of the bolt carrier assembly **408**, **410**. The buffer member **422** further includes a second portion **430** that is sized to fit within the inner diameter of the action spring **420**.

It should be appreciated that different caliber ammunition may have different lengths. For example, a standard 7.62 mm NATO cartridge may have a length of 51 mm, while a 5.56 mm NATO cartridge may have a length of 45 mm Therefore, since the position of the chamber does not change, when different upper receivers **404**, **406** are coupled to the common lower receiver **402** the length of travel or amount of movement of the buffer member **422** may be different to accommodate the different size bolt carrier assemblies **408**, **410**. In the embodiment of FIGS. **32-35**, the buffer member **422** may be arranged in at least one of three positions during operation. In FIGS. **32** and **34**, the buffer assembly **412** is in a fully compressed or first position that

occurs due to the recoil forces and gasses generated by the expending of an ammunition cartridge. This rearward movement of the bolt carrier assembly **408**, **410** causes the cartridge to be expelled and the trigger mechanisms reset as described above. In this position, the end **436** of the second portion **430** is adjacent to or against the end of opening **424**.

The compression of the action spring **420** biases the bolt carrier assembly **408**, **410** forward to return the bolt carrier assembly **408**, **410** to a firing position and chamber a new ammunition cartridge. As discussed above, different ammunition cartridges have different lengths. To accommodate this difference in size, the buffer assembly **412** is configured to operate in one or more extended positions, such as second position (FIG. **33**) and a third position (FIG. **35**). When longer cartridges are used, such as 7.62 mm NATO cartridges for example, the first portion **428** may extend beyond the end **438** of the receiver extension **426** as shown in FIG. **36** and into the upper receiver **406**. When in the second position, a portion **440** of the first portion **428** remains within the opening **424**. By sliding beyond the end **438**, the smaller bolt carrier assembly **408** will be properly positioned to place the ammunition cartridge in the firing chamber. By maintaining the portion **440** within the opening **424**, the buffer assembly **412** may remain axially aligned within the opening during operation.

When a shorter ammunition cartridge is used, such as a 5.56 mm NATO ammunition cartridge for example, the buffer assembly **412** will move to a third position (FIG. **35**) wherein the first portion **422** remains substantially within the opening **424**. In one embodiment, the face **432** is substantially co-planar with the end **438** of the receiver extension **426** (FIG. **37**). It should be appreciated that while embodiments herein described the extended position has being the second position and third position, this is for exemplary purposes and the claimed embodiment should not be so limited. Embodiments of the rifle **400** may be able accommodate a wide range of ammunition cartridge lengths with each having a different extended position and a varying amount of the portion **440** remaining within the opening **424**.

In accordance with one exemplary embodiment, a modular automatic or semiautomatic rifle is provided. The rifle has a lower receiver assembly having a fire control assembly for firing the rifle. An upper receiver assembly is provided with a frame and a bolt carrier assembly configured for firing bullets of a predetermined caliber. The lower receiver has a mating interface configured for operably joining the lower receiver assembly to the upper receiver assembly, and for operably joining the lower receiver assembly to another upper receiver assembly different from the upper receiver assembly configured for firing bullets of the predetermined caliber. The other upper receiver assembly has a different frame and different bolt carrier assembly configured for firing bullets of a different predetermined caliber.

In accordance with another exemplary embodiment, a modular automatic or semiautomatic rifle is provided. The rifle has an upper receiver assembly having a bolt carrier assembly and a barrel. A lower receiver assembly is provided connectable to the upper receiver assembly and having a fire control assembly. The upper receiver assembly is selectable from different interchangeable upper receiver assemblies, each having a different predetermined characteristic determining a different predetermined caliber of bullets capable of being fired by the rifle.

In accordance with another exemplary embodiment, a modular automatic or semiautomatic rifle is provided. The rifle has an upper receiver assembly having a frame and a bolt carrier assembly, the upper receiver assembly configured for firing bullets of a predetermined caliber. A lower receiver assembly is provided connectable to the upper receiver assembly and having a fire control assembly, the lower receiver assembly having a mating interface configured for operably joining the lower receiver assembly to the upper receiver assembly. An adapter is provided connectable to the mating interface, the adapter mating the lower receiver assembly to another upper receiver assembly different from the upper receiver assembly configured for firing bullets of the predetermined caliber, the other upper receiver assembly having a different frame and a different bolt carrier assembly configured for firing bullets of a different predetermined caliber.

While the invention has been described in detail in connection with only a limited number of embodiments, it should be readily understood that the invention is not limited to such disclosed embodiments. Rather, the invention can be modified to incorporate any number of variations, alterations, substitutions or equivalent arrangements not heretofore described, but which are commensurate with the spirit and scope of the invention. Additionally, while various embodiments of the invention have been described, it is to be understood that aspects of the invention may include only some of the described embodiments. Accordingly, the invention is not to be seen as limited by the foregoing description, but is only limited by the scope of the appended claims.

The invention claimed is:

1. A firearm comprising:

a lower receiver having an extension portion with an opening, the lower receiver being configured to selectively couple with a first upper receiver having a first barrel and a first bolt carrier assembly, the first upper receiver sized to receive a first bullet having a first caliber and a second upper receiver, having a second barrel and a second bolt carrier assembly, the second upper receiver sized to receive a second bullet having a second caliber, the second caliber being smaller than the first caliber; and,

a buffer assembly common to both the first upper receiver and the second upper receiver and disposed at least partially within the opening, the buffer assembly including a biasing member and a buffer member, the buffer member being movable in a range defined by a first position wherein the buffer assembly is compressed by recoil forces and gasses generated by firing of either the first bullet or the second bullet from the firearm, and a second position wherein a first portion of the buffer member extends past the opening towards a forward end of the firearm or a third position wherein a face of the first portion remains flush with the opening, wherein the buffer member is movable between the first position and the second position when the first upper receiver is coupled to the lower receiver and wherein the buffer member is movable between the first position and the third position when the second upper receiver is coupled to the lower receiver.

2. The firearm of claim **1** wherein:

the biasing member has an outer diameter sized to fit with-in the opening and an inner diameter; and,

wherein the first portion of the buffer member has an outer diameter sized to fit within the opening and a second portion of the buffer member has an outer diameter sized to fit within the inner diameter of the biasing member.

3. The firearm of claim 2 wherein the outer diameter of the first portion is sized to keep the buffer assembly substantially axially aligned with the opening.

4. The firearm of claim 2 wherein:

the first portion of the buffer member includes a portion that remains within the opening when the first portion extends past the opening.

5. The firearm of claim 4 wherein the first portion remains flush with the opening when the buffer member is in the third position.

6. A firearm comprising;

a lower receiver having an extension portion with an opening having a first end and a second end, the lower receiver being configured to selectively couple with a plurality of upper receivers, wherein each of the plurality of upper receivers has a distinct barrel and bolt carrier assembly configured to receiver a bullet having a different caliber;

a biasing member disposed within the opening, the biasing member having a first end and a second end, the first end of the biasing member being in contact with the second end of the opening; and,

a buffer member common to each of the plurality of upper receivers and having a first portion operably coupled to the second end of the biasing member, the buffer member also includes a second portion having a diameter sized to axially align the buffer member within the opening, wherein the buffer member is movable in a range defined by a first position wherein the buffer assembly is compressed towards the first end of the opening by recoil forces and gasses generated by firing of the bullet from the firearm and a first extended position wherein a face of the second portion extends past the opening or a second extended position wherein the face is flush with the opening, and wherein the first extended position is associated with at least one of the plurality of upper receivers and wherein the second extended position is associated with at least one other one of the plurality of upper receivers, wherein the second portion is at least partially disposed within the opening in the first extended position and the second extended position.

7. The firearm of claim 6 wherein the first portion is sized to fit within an inner diameter of the biasing member.

8. The firearm of claim 6 wherein the plurality of upper receivers includes a first upper receiver and a second upper receiver, the first upper receiver being sized to receive a first bullet having a first caliber, and the second upper receiver being sized to receive a second bullet having a second caliber, the second caliber being larger than the first caliber.

9. The firearm of claim 8, wherein

the buffer member is movable between the first position and the second extended position when the first upper receiver is coupled to the lower receiver; and,

the buffer member is movable between the first position and the first extended position when the second upper receiver is coupled to the lower receiver.

10. The firearm of claim 8 wherein the first upper receiver is configured to receive a NATO 5.56 mm bullet.

11. The firearm of claim 10 wherein the second upper receiver is configured to receive a NATO 7.62 mm bullet.

12. A method of operating a firearm comprising:

coupling a first upper receiver to a lower receiver, the lower receiver having an extension portion having an opening, the first upper receiver having a first barrel and a first bolt carrier assembly;

moving a buffer member between a first position and a second position during operation of the firearm when the first upper receiver is secured to the lower receiver, the buffer member extending at least partially past the opening when the buffer member is in the second position and the first upper receiver is secured to the lower receiver;

removing the first upper receiver from the lower receiver;

coupling a second upper receiver to the lower receiver, the second upper receiver having a second barrel and a second bolt carrier assembly; and,

moving the buffer member between the first position and a third position during operation of the firearm when the second upper receiver is secured to the lower receiver, wherein a face of the buffer member is flush with the opening when the buffer member is in the third position and the second upper receiver is secured to the lower receiver, and wherein the buffer member is common to both the first upper receiver and the second upper receiver.

13. The method of claim 12, wherein the first upper receiver is configured to receive a NATO 7.62 mm bullet and wherein the second upper receiver is configured to receive a NATO 5.56 mm bullet.

14. The method of claim 13, wherein the first bolt carrier is configured to receive a NATO 7.62 mm bullet and wherein the second bolt carrier is configured to receive a NATO 5.56 mm bullet.

15. The method of claim 14, wherein a portion of the buffer member remains within the opening when the buffer member is in the second position.

16. The method of claim 15, wherein a portion of the buffer member is received within a biasing member located in the extension portion.

* * * * *